GREE
Change for Life

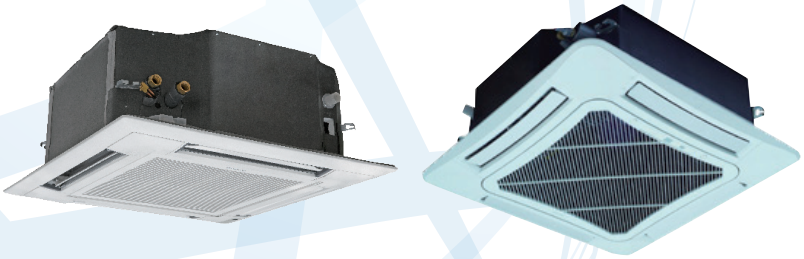

CASSETTE TYP FAN COIL UNIT SERVICE MANUAL

(GC201202-I)

GREE ELECTRIC APPLIANCES, INC.OF ZHUHAI

splitoff.ru

Большая библиотека технической документации
https://splitsystema48.ru/instrukcii-po-ekspluatacii-kondicionerov.html
каталоги, инструкции, сервисные мануалы, схемы.

CONTENTS

PRODUCT.....2
1. MODELS LIST 2
2. NOMENCLATURE OF THE UNIT 4
3. FUNCTION 4
4. PRODUCT DATA.....5
CONTROL.....16
1. WIRELESS REMOTE CONTROLLER 16
2. WIRED REMOTE CONTROLLER.....23
INSTALLTION 27
1. SELECTION THE MOUNTING POSITION 27
2. DRAINAGE PIPE.....28
3. PRECAUTIONS FOR DRAINAGE RAISING PIPE.....28
4. ELECTRIC WIRING.....30
5. INSTALLATION OF PANEL 31
MAINTENANCE.....35
1.TROUBLESHOOTING 35
2.CARE AND MAINTENANCE.....35
3. WIRING DIAGRAM 38
4. DISASSEMBLY AND ASSEMBLY PROCEDURE OF MAIN PARTS 40
5. EXPLODED VIEWS AND SPARE PART LISTS 46

Все каталоги и инструкции здесь: https://splitsystema48.ru/instrukcii-po-ekspluatacii-kondicionerov.html

PRODUCT

Все каталоги и инструкции здесь: https://splitsystema48.ru/instrukcii-po-ekspluatacii-kondicionerov.html

PRODUCT
1. MODELS LIST

Model Name	Product Code	Cooling Capacity (W)	Air flow Volume (m^3/h)	Power Supply (V, Ph, Hz)	Remarks
FP-8XD-E	EM52000051	4600/7500	850	220-240V~ 50Hz	
FP-8XD/A-E	EM5200045010	4640/7500	850	220-240V~ 50Hz	
FP-10XD-E	EM52000061	5400/9100	1020	220-240V~ 50Hz	
FP-10XD/A-E	EM5200046010	5400/9100	1020	220-240V~ 50Hz	
FP-12.5XD-E	EM52000031	6700/10500	1270	220-240V~ 50Hz	
FP-12.5XD/A-E	EM5200047010	6700/10500	1250	220-240V~ 50Hz	
FP-14XD-E	EM52000071	7700/11200	1560	220-240V~ 50Hz	
FP-14XD/A-E	EM5200048010	7740/11200	1430	220-240V~ 50Hz	
FP-16XD-E	EM52000081	8700/12900	1640	220-240V~ 50Hz	
FP-16XD/A-E	EM5200049010	8700/12900	1640	220-240V~ 50Hz	
FP-18XD-E	EM52000041	9600/14600	1850	220-240V~ 50Hz	
FP-18XD/A-E	EM5200050010	9600/14600	1800	220-240V~ 50Hz	
FP-51XD-E	EM52000011	3000/4000	510	220-240V~ 50Hz	
FP-68XD-E	EM52000021	3500/5000	630		

Все каталоги и инструкции здесь: https://splitsystema48.ru/instrukcii-po-ekspluatacii-kondicionerov.html

Model Name	Product Code	Cooling/Heating Capacity (W)	Air flow Volume (m^3/h)	Power Supply (V, Ph, Hz)	Remarks
FP-85XD/B-T	EM520N0930	4150/5600	800	220-240V~ 50Hz	
	EM520N0940	4160/7800	780	208-230V~ 60Hz	
FP-102XD/B-T	EM520N0910	500/6500	1020	220-240V~ 50Hz	
	EM520N0920	540/9000	1020	208-230V~ 60Hz	
FP-125XD/B-T	EM520N0890	6000/7800	1180	220-240V~ 50Hz	
	EM520N0900	6300/10000	1130	208-230V~ 60Hz	
FP-140XD/B-T	EM520N0870	8000/9000	1400	220-240V~ 50Hz	
	EM520N0880	8000/12000	1350	208-230V~ 60Hz	
FP-160XD/B-T	EM520N0850	8700/10000	1550	220-240V~ 50Hz	
	EM520N0860	9000/14000	1550	208-230V~ 60Hz	
FP-180XD/B-T	EM520N0830	9500/11000	1800	220-240V~ 50Hz	
	EM520N0840	10000/16000	1800	208-230V~ 60Hz	
FP-200XD/B-T	EM520N0810	1300/14600	2000	220-240V~ 50Hz	
	EM520N0820	1300/19000	2000	208-230V~ 60Hz	

Все каталоги и инструкции здесь: https://splitsystema48.ru/instrukcii-po-ekspluatacii-kondicionerov.html

2. NOMENCLATURE OF THE UNIT

FP	-	□	□	□	/	□	-	□
1		2	3	4		4		5

NO.	Description	Options
1	Fan coil	Fan coil unit
2	Air flow volume	Number×10 m^3/h(FP-51XD-E;FP-68XD-E);Number×100 m^3/h(8,10,12.5,14,16,18)
3	Structure type	XD-Cassette Type
4	Design Sequence	Arranged by A, B,C…
5	Power code	E-220-240V~ 50Hz

3. FUNCTION

1. Novel pattern: the exposed skin plates of unit looks so elegant and luxurious that they can be taken as the indoor decorations.
2. Compact design: A large number of non-metallic materials have been used, so that the body of the unit is quite light-weight and thin, which makes the unit looks sensuous.
3. Low noise: Dynamic principles have been adopted for the design of the fan blades so as to make sure the air volume is enough and running noise is considerably low.
4. Durable filter screen: The durable filter screen shares a cleaning cycle 20 times longer than that of the conventional filter screen, needless to clean it frequently.
5. Microcomputer control: The unit is able to automatically adjust the fan speed in accordance with the indoor ambient temperature to meet a wide range of users' requirements.
6. Small height of the unit, saving much installation space
7. Large cooling (heating) capacity, low noise, three-speed motor which can adjust the air volume and meet a wide range of users' requirements.
8. Excellent material, stringent process control, which guarantee the hi-quality and long life of the unit.
9. Die-formed drain pan, entirely bonded insulating material, carefree about the condensate water.

Все каталоги и инструкции здесь: https://splitsystema48.ru/instrukcii-po-ekspluatacii-kondicionerov.html

4. PRODUCT DATA

Model			FP-8XD/A-E	FP-10XD/A-E	FP-12.5XD/A-E	FP-14XD/A-E
Code			EM5200045010	EM5200046010	EM5200047010	EM5200048010
Air flow volume	High	CFM	500	600	735	841
		m^3/h	850	1020	1250	1430
	Medium	CFM	375	464	606	802
		m^3/h	637	789	1030	1363
	Low	CFM	303	362	538	705
		m^3/h	515	615	915	1200
Capacity	Cooling	W	4640	5400	6700	7740
	Heating	W	7500	9100	10500	11200
Power system	Type	V-Ph-Hz	220-240V~ 50Hz	220-240V~ 50Hz	220-240V~ 50Hz	220-240V~ 50Hz
	Input	W	100	100	150	140
Exterior static pressure		Pa	0	0	0	0
Water system	Water flow volume	m^3/h	0.829	0.964	1.196	1.382
	Pressure drop	kPa	15	25	25	30
Coil	Type	-	Aluminum fin-copper tube	Aluminum fin-copper tube	Aluminum fin-copper tube	Aluminum fin-copper tube
	Operating pressure	MPa	≤1.6MPa	≤1.6MPa	≤1.6MPa	≤1.6MPa
Motor	Type	-	FN35B	FN35B	FN35B	FN50T
	Capacitor	μF	2.5	3.5	3.5	2.5
	Power output	W	35	35	35	50
Sound pressure level		dB(A)	46	46	47	52
Connection pipe size	Water inlet &outlet	inch	3/4"	3/4"	3/4"	3/4"
	Condensing water drain	mm	32	32	32	32
Outline dimension (W×D×H)	Body	mm	840×840×240	840×840×240	840×840×240	840×840×320
	Panel	mm	960×960×60	960×960×60	960×960×60	960×960×60
Package dimension (W×D×H)	Body	mm	960×960×310	960×960×310	960×960×310	960×960×394
	Panel	mm	1040×1025×115	1040×1025×115	1040×1025×115	1040×1025×115
Net weight	Body	kg	27	27	27	33
	Panel	kg	6.5	6.5	6.5	6.5
Gross weight	Body	kg	35	35	35	42
	Panel	kg	10	10	10	10
Loading quantity		20'GP	84	84	84	72
		40'GP	168	168	168	120
		40'HQ	192	192	192	144
Wired remote controller			Z5K351/Z4E351B	Z5K351/Z4E351B	Z5K351/Z4E351B	Z5K351/Z4E351B
Wireless remote controller			YB1F2(X-FAN)	YB1F2(X-FAN)	YB1F2(X-FAN)	YB1F2(X-FAN)

Все каталоги и инструкции здесь: https://splitsystema48.ru/instrukcii-po-ekspluatacii-kondicionerov.html

Model			FP-16XD/A-E	FP-18XD/A-E
Code			EM5200049010	EM5200050010
Air flow volume	High	CFM	965	1060
		m^3/h	1640	1800
	Medium	CFM	853	1035
		m^3/h	1460	1760
	Low	CFM	781	932
		m^3/h	1327	1584
Capacity	Cooling	W	8700	9600
	Heating	W	12900	14600
Power system	Type	V-Ph-Hz	220-240V~ 50Hz	220-240V~ 50Hz
	Input	W	150	155
Exterior static pressure		Pa	0	0
Water system	Water flow volume	m^3/h	1.554	1.714
	Pressure drop	kPa	30	30
Coil	Type	-	Aluminum fin-copper tube	Aluminum fin-copper tube
	Operating pressure	MPa	≤1.6MPa	≤1.6MPa
Motor	Type	-	FN50T	FN50T
	Capacitor	μF	4.5	4.5
	Power output	W	50	50
Sound pressure level		dB(A)	53	54
Connection pipe size	Water inlet &outlet	inch	3/4"	3/4"
	Condensing water drain	mm	32	32
Outline dimension (W×D×H)	Body	mm	840×840×320	840×840×320
	Panel	mm	960×960×60	960×960×60
Package dimension (W×D×H)	Body	mm	960×960×394	960×960×394
	Panel	mm	1040×1025×115	1040×1025×115
Net weight	Body	kg	33	33
	Panel	kg	6.5	6.5
Gross weight	Body	kg	42	42
	Panel	kg	10	10
Loading quantity		20'GP	72	72
		40'GP	120	120
		40'HQ	144	144
Wired remote controller			Z5K351/Z4E351B	Z5K351/Z4E351B
Wireless remote controller			YB1F2(X-FAN)	YB1F2(X-FAN)

Все каталоги и инструкции здесь: https://splitsystema48.ru/instrukcii-po-ekspluatacii-kondicionerov.html

Model			FP-8XD-E	FP-10XD-E	FP-12.5XD-E	FP-14XD-E
Code			EM52000051	EM52000061	EM52000031	EM52000071
Power system	Type	V-Ph-Hz	220-240V~ 50Hz	220-240V~ 50Hz	220-240V~ 50Hz	220-240V~ 50Hz
	Input	W	100	100	150	140
Air flow volume	High	CFM	500	600	735	840
		m^3/h	850	1020	1250	1430
	Medium	CFM	375	464	606	802
		m^3/h	638	789	1030	1363
	Low	CFM	303	363	538	705
		m^3/h	515	617	914	1198
Capacity	Cooling	W	4640	5400	6700	7740
	Heating	W	7500	9100	10500	11200
Electric heater rated power		W	1400	1400	1400	1400
Water system	Water flow volume	m^3/h	0.81	0.95	1.18	1.36
	Pressure drop	kPa	15	25	25	25
Sound pressure level		dB(A)	46	46	47	52
Coil	Type	-	Aluminum fin-copper tube	Aluminum fin-copper tube	Aluminum fin-copper tube	Aluminum fin-copper tube
	Operating pressure	MPa	≤1.6MPa	≤1.6MPa	≤1.6MPa	≤1.6MPa
Motor	Type	-	FN35B	FN35B	FN35B	FN50T
	Capacitor	μF	2.5	3.5	3.5	2.5
Connection pipe size	Water inlet &outlet	inch	3/4"	3/4"	3/4"	3/4"
	Condensing water drain	mm	32	32	32	32
Outline dimension (W×D×H)	Body	mm	840×840×240	840×840×240	840×840×240	840×840×320
	Panel	mm	960×960×60	960×960×60	960×960×60	960×960×60
Package dimension (W×D×H)	Body	mm	960×960×310	960×960×310	960×960×310	960×960×394
	Panel	mm	1040×1025×115	1040×1025×115	1040×1025×115	1040×1025×115
Net weight	Body	kg	30	30	30	38
	Panel	kg	6.5	6.5	6.5	6.5
Gross weight	Body	kg	38	38	38	46
	Panel	kg	10	10	10	10
Loading quantity		20'GP	61	61	51	51
		40'GP	116	116	116	93
		40'HQ	133	133	133	112
Wired remote controller			Z5K351/Z4E351B	Z5K351/Z4E351B	Z5K351/Z4E351B	Z5K351/Z4E351B
Wireless remote controller			YB1F2(X-FAN)	YB1F2(X-FAN)	YB1F2(X-FAN)	YB1F2(X-FAN)

Все каталоги и инструкции здесь: https://splitsystema48.ru/instrukcii-po-ekspluatacii-kondicionerov.html

Model			FP-16XD-E	FP-18XD-E
Code			EM52000081	EM52000041
Power system	Type	V-Ph-Hz	220-240V~ 50Hz	220-240V~ 50Hz
	Input	W	160	155
Air flow volume	High	CFM	965	1059
		m^3/h	1640	1800
	Medium	CFM	853	1035
		m^3/h	1450	1760
	Low	CFM	781	932
		m^3/h	1328	1584
Capacity	Cooling	W	8700	9600
	Heating	W	12900	14600
Electric heater rated power		W	1400	1400
Water system	Water flow volume	m^3/h	1.53	1.68
	Pressure drop	kPa	27	29
Sound pressure level		dB(A)	53	54
Coil	Type	-	Aluminum fin-copper tube	Aluminum fin-copper tube
	Operating pressure	MPa	≤1.6MPa	≤1.6MPa
Motor	Type	-	FN50T	FN50T
	Capacitor	μF	4.5	4.5
Connection pipe size	Water inlet &outlet	inch	3/4"	3/4"
	Condensing water drain	mm	32	32
Outline dimension (W×D×H)	Body	mm	840×840×320	840×840×320
	Panel	mm	960×960×60	960×960×60
Package dimension (W×D×H)	Body	mm	960×960×394	960×960×394
	Panel	mm	1040×1025×115	1040×1025×115
Net weight	Body	kg	38	38
	Panel	kg	6.5	6.5
Gross weight	Body	kg	46	46
	Panel	kg	10	10
Loading quantity		20'GP	51	51
		40'GP	93	93
		40'HQ	112	112
Wired remote controller			Z5K351/Z4E351B	Z5K351/Z4E351B
Wireless remote controller			YB1F2(X-FAN)	YB1F2(X-FAN)

Все каталоги и инструкции здесь: https://splitsystema48.ru/instrukcii-po-ekspluatacii-kondicionerov.html

Model			FP-51XD-E	FP-68XD-E
Code			EM52000011	EM52000021
Power system	Type	V-Ph-Hz	220-240V~ 50Hz	220-240V~ 50Hz
	Input	W	49	56
Air flow volume	High	CFM	300	371
		m^3/h	510	680
	Medium	CFM	247	318
		m^3/h	420	540
	Low	CFM	206	265
		m^3/h	350	450
Capacity	Cooling	W	3000	3500
	Heating	W	4000	5000
Electric heater rated power		W	-	-
Water system	Water flow volume	m^3/h	0.49	0.616
	Pressure drop	kPa	5	9
Sound pressure level		dB(A)	43	48
Coil	Type	-	Aluminum fin-copper tube	Aluminum fin-copper tube
	Operating pressure	MPa	≤1.6MPa	≤1.6MPa
Motor	Type	-	FN11T	FN11T
	Capacitor	μF	1	2.5
Connection pipe size	Water inlet &outlet	inch	3/4"	3/4"
	Condensing water drain	mm	25	25
Outline dimension (W×D×H)	Body	mm	600×600×230	600×600×230
	Panel	mm	650×650×50	650×650×50
Package dimension (W×D×H)	Body	mm	848×678×310	848×678×310
	Panel	mm	730×670×102	730×670×102
Net weight	Body	kg	19.3	19.3
	Panel	kg	5	5
Gross weight	Body	kg	27	27
	Panel	kg	6	6
Loading quantity		20'GP	114	114
		40'GP	216	216
		40'HQ	256	256
Wired remote controller			Z5K351	Z5K351
Wireless remote controller			YB1F2(X-FAN)	YB1F2(X-FAN)

Notes:

1. The water working temperature is from 7°C(44.6°F) to 60°C(140°F).
2. The temperature exchange efficiency and enthalpy exchange efficiency are tested under these testing conditions as below:

(1) Cooling efficiency: air 27°C(80.6°F) DB, 19.5°C(67.1°F) WB, water temperature in 7°C(44.6°F), water out 12°C(53.6°F).

(2) Heating efficiency: air 21°C (69.8°F) DB, Water temperature: 60°C(140°F).

Все каталоги и инструкции здесь: https://splitsystema48.ru/instrukcii-po-ekspluatacii-kondicionerov.html

Model			FP-85XD/B-T	FP-85XD/B-T	FP-102XD/B-T	FP-102XD/B-T
Code			EM520N0940	EM520N0930	EM520N0920	EM520N0910
Power system	Type	V-Ph-Hz	208-230V~ 60Hz	220-240V~ 50Hz	208-230V~ 60Hz	220-240V~ 50Hz
	Input	W	70	80	130	110
Air flow volume	High	CFM	177	181	231	231
		m^3/h	780	800	1020	1020
	Medium	CFM	143	147	215	215
		m^3/h	630	650	950	950
	Low	CFM	125	125	204	204
		m^3/h	550	550	900	900
Capacity	Cooling	W	4160	4150	5400	5000
	Heating	W	7800	5600	9000	6500
Electric heater rated power		W	-	-	-	-
Water system	Cooling water flow volume	m^3/h	0.792	0.763	1.107	0.963
	Heating water flow volume	m^3/h	0.79	0.458	1.148	0.584
	Cooling pressure drop	kPa	27	24	48	36
	Heating pressure drop	kPa	24	8	47	13
Sound pressure level		dB(A)	39	39	49	49
Coil	Type	-	Aluminum fin-copper tube	Aluminum fin-copper tube	Aluminum fin-copper tube	Aluminum fin-copper tube
	Operating pressure	MPa	≤1.6MPa	≤1.6MPa	≤1.6MPa	≤1.6MPa
Motor	Type	-	FN35D-1	FN35D-1	FN35D-1	FN35D-1
	Capacitor	μF	2.00	2.00	5.00	5.00
Connection pipe size	Water inlet &outlet	inch	3/4"	3/4"	3/4"	3/4"
	Condensing water drain	mm	25	25	25	25
Outline dimension (W×D×H)	Body	mm	840×840×190	840×840×190	840×840×190	840×840×190
	Panel T01	mm	950×950×60	950×950×60	950×950×60	950×950×60
	Panel TB03	mm	950×950×85	950×950×85	950×950×85	950×950×85
Package dimension (W×D×H)	Body	mm	963×963×272	963×963×272	963×963×272	963×963×272
	Panel T01	mm	1028×1043×130	1028×1043×130	1028×1043×130	1028×1043×130
	Panel TB03	mm	1033×1038×133	1033×1038×133	1033×1038×133	1033×1038×133
Net weight	Body	kg	25.0	25.0	25.0	25.0
	Panel T01	kg	3.0	3.0	3.0	3.0
	Panel TB03	kg	7	7	7	7
Gross weight	Body	kg	33.0	33.0	33.0	33.0
	Panel T01	kg	5.0	5.0	5.0	5.0
	Panel TB03	kg	11	11	11	11
Loading quantity	20'GP(with panel T01)		57	57	57	57
	40'GP (with panel T01)		133	133	133	133
	40'HQ (with panel T01)		149	149	149	149
	20'GP (with panel TB03)		56	56	56	56
	40'GP (with panel TB03)		131	131	131	131
	40'HQ (with panel TB03)		147	147	147	147
Wired remote controller			Z4E351B	Z4E351B	Z4E351B	Z4E351B
Wireless remote controller			YB1FA(X-FAN)	YB1FA(X-FAN)	YB1FA(X-FAN)	YB1FA(X-FAN)

Все каталоги и инструкции здесь: https://splitsystema48.ru/instrukcii-po-ekspluatacii-kondicionerov.html

Model			FP-125XD/B-T	FP-125XD/B-T	FP-140XD/B-T	FP-140XD/B-T
Code			EM520N0900	EM520N0890	EM520N0880	EM520N0870
Power system	Type	V-Ph-Hz	208-230V~ 60Hz	220-240V~ 50Hz	208-230V~ 60Hz	220-240V~ 50Hz
	Input	W	82	82	120	120
Air flow volume	High	CFM	256	268	306	318
		m^3/h	1130	1180	1350	1400
	Medium	CFM	204	227	249	284
		m^3/h	900	1000	1100	1250
	Low	CFM	170	204	227	261
		m^3/h	750	900	1000	1150
Capacity	Cooling	W	6300	6000	8000	8000
	Heating	W	10000	7800	12000	9000
Electric heater rated power		W	-	-	-	-
Water system	Cooling water flow volume	m^3/h	1.146	1.703	1.347	1.377
	Heating water flow volume	m^3/h	1.144	0.637	1.346	0.79
	Cooling pressure drop	kPa	27	24	33	30
	Heating pressure drop	kPa	28	9	29	10
Sound pressure level		dB(A)	43	43	50	50
Coil	Type	-	Aluminum fin-copper tube	Aluminum fin-copper tube	Aluminum fin-copper tube	Aluminum fin-copper tube
	Operating pressure	MPa	≤1.6MPa	≤1.6MPa	≤1.6MPa	≤1.6MPa
Motor	Type	-	FN35B-1	FN35B-1	FN35C	FN35C
	Capacitor	μF	2.00	2.00	4.00	4.00
Connection pipe size	Water inlet &outlet	inch	3/4"	3/4"	3/4"	3/4"
	Condensing water drain	mm	25	25	25	25
Outline dimension (W×D×H)	Body	mm	840×840×240	840×840×240	840×840×240	840×840×240
	Panel T01	mm	950×950×60	950×950×60	950×950×60	950×950×60
	Panel TB03	mm	950×950×85	950×950×85	950×950×85	950×950×85
Package dimension (W×D×H)	Body	mm	963×963×325	963×963×325	963×963×325	963×963×325
	Panel T01	mm	1028×1043×130	1028×1043×130	1028×1043×130	1028×1043×130
	Panel TB03	mm	1033×1038×133	1033×1038×133	1033×1038×133	1033×1038×133
Net weight	Body	kg	26.0	26.0	26.0	26.0
	Panel T01	kg	3.0	3.0	3.0	3.0
	Panel TB03	kg	7	7	7	7
Gross weight	Body	kg	34.0	34.0	34.0	34.0
	Panel T01	kg	5.0	5.0	5.0	5.0
	Panel TB03	kg	11	11	11	11
Loading quantity	20'GP(with panel T01)		50	50	50	50
	40'GP (with panel T01)		121	121	121	121
	40'HQ (with panel T01)		134	134	134	134
	20'GP (with panel TB03)		50	50	50	50
	40'GP (with panel TB03)		117	117	117	117
	40'HQ (with panel TB03)		133	133	133	133
Wired remote controller			Z4E351B	Z4E351B	Z4E351B	Z4E351B
Wireless remote controller			YB1FA(X-FAN)	YB1FA(X-FAN)	YB1FA(X-FAN)	YB1FA(X-FAN)

Все каталоги и инструкции здесь: https://splitsystema48.ru/instrukcii-po-ekspluatacii-kondicionerov.html

Model			FP-160XD/B-T	FP-160XD/B-T	FP-180XD/B-T	FP-180XD/B-T
Code			EM520N0860	EM520N0850	EM520N0840	EM520N0830
Power system	Type	V-Ph-Hz	208-230V~ 60Hz	220-240V~ 50Hz	208-230V~ 60Hz	220-240V~ 50Hz
	Input	W	140	130	160	160
Air flow volume	High	CFM	352	352	408	408
		m^3/h	1550	1550	1800	1800
	Medium	CFM	295	318	318	329
		m^3/h	1300	1400	1400	1450
	Low	CFM	261	295	295	306
		m^3/h	1150	1300	1300	1350
Capacity	Cooling	W	9000	8700	10000	9500
	Heating	W	14000	10000	16000	11000
Electric heater rated power		W	-	-	-	-
Water system	Cooling water flow volume	m^3/h	1.6	1.504	1.899	1.718
	Heating water flow volume	m^3/h	1.613	0.892	1.899	0.968
	Cooling pressure drop	kPa	34	30	42	34
	Heating pressure drop	kPa	34	11	43	12
Sound pressure level		dB(A)	51	51	50	50
Coil	Type	-	Aluminum fin-copper tube	Aluminum fin-copper tube	Aluminum fin-copper tube	Aluminum fin-copper tube
	Operating pressure	MPa	≤1.6MPa	≤1.6MPa	≤1.6MPa	≤1.6MPa
Motor	Type	-	FN35C	FN35C	FN50K-1	FN50K-1
	Capacitor	μF	5.00	5.00	3.50	3.50
Connection pipe size	Water inlet &outlet	inch	3/4"	3/4"	3/4"	3/4"
	Condensing water drain	mm	25	25	25	25
Outline dimension (W×D×H)	Body	mm	840×840×240	840×840×240	840×840×320	840×840×320
	Panel T01	mm	950×950×60	950×950×60	950×950×60	950×950×60
	Panel TB03	mm	950×950×85	950×950×85	950×950×85	950×950×85
Package dimension (W×D×H)	Body	mm	963×963×325	963×963×325	963×963×409	963×963×409
	Panel T01	mm	1028×1043×130	1028×1043×130	1028×1043×130	1028×1043×130
	Panel TB03	mm	1033×1038×133	1033×1038×133	1033×1038×133	1033×1038×133
Net weight	Body	kg	26.0	26.0	32.0	32.0
	Panel T01	kg	3.0	3.0	3.0	3.0
	Panel TB03	kg	7	7	7	7
Gross weight	Body	kg	34.0	34.0	41.0	41.0
	Panel T01	kg	5.0	5.0	5.0	5.0
	Panel TB03	kg	11	11	11	11
Loading quantity	20'GP(with panel T01)		50	50	42	42
	40'GP (with panel T01)		121	121	98	98
	40'HQ (with panel T01)		134	134	112	112
	20'GP (with panel TB03)		50	50	42	42
	40'GP (with panel TB03)		117	117	98	98
	40'HQ (with panel TB03)		133	133	112	112
Wired remote controller			Z4E351B	Z4E351B	Z4E351B	Z4E351B
Wireless remote controller			YB1FA(X-FAN)	YB1FA(X-FAN)	YB1FA(X-FAN)	YB1FA(X-FAN)

Все каталоги и инструкции здесь: https://splitsystema48.ru/instrukcii-po-ekspluatacii-kondicionerov.html

Model			FP-200XD/B-T	FP-200XD/B-T
Code			EM520N0820	EM520N0810
Power system	Type	V-Ph-Hz	208-230V~ 60Hz	220-240V~ 50Hz
	Input	W	230	210
Air flow volume	High	CFM	454	454
		m^3/h	2000	2000
	Medium	CFM	352	386
		m^3/h	1550	1700
	Low	CFM	284	329
		m^3/h	1250	1450
Capacity	Cooling	W	13000	13000
	Heating	W	19000	14600
Electric heater rated power		W	-	-
Water system	Cooling water flow volume	m^3/h	2.186	2.42
	Heating water flow volume	m^3/h	2.176	0.892
	Cooling pressure drop	kPa	35	34
	Heating pressure drop	kPa	35	30
Sound pressure level		dB(A)	55	55
Coil	Type	-	Aluminum fin-copper tube	Aluminum fin-copper tube
	Operating pressure	MPa	≤1.6MPa	≤1.6MPa
Motor	Type	-	FN50K-2	FN50K-2
	Capacitor	μF	5.00	5.00
Connection pipe size	Water inlet &outlet	inch	3/4"	3/4"
	Condensing water drain	mm	25	25
Outline dimension (W×D×H)	Body	mm	840×840×320	840×840×320
	Panel T01	mm	950×950×60	950×950×60
	Panel TB03	mm	950×950×85	950×950×85
Package dimension (W×D×H)	Body	mm	963×963×409	963×963×409
	Panel T01	mm	1028×1043×130	1028×1043×130
	Panel TB03	mm	1033×1038×133	1033×1038×133
Net weight	Body	kg	32.0	32.0
	Panel T01	kg	3.0	3.0
	Panel TB03	kg	7	7
Gross weight	Body	kg	41.0	41.0
	Panel T01	kg	5.0	5.0
	Panel TB03	kg	11	11
Loading quantity	20'GP(with panel T01)		42	42
	40'GP (with panel T01)		98	98
	40'HQ (with panel T01)		112	112
	20'GP (with panel TB03)		42	42
	40'GP (with panel TB03)		98	98
	40'HQ (with panel TB03)		112	112
Wired remote controller			Z4E351B	Z4E351B
Wireless remote controller			YB1FA(X-FAN)	YB1FA(X-FAN)

Все каталоги и инструкции здесь: https://splitsystema48.ru/instrukcii-po-ekspluatacii-kondicionerov.html

Testing condition:

For 60Hz :

The FCU designed for installation indoor. The environmental temperature is from 5ºC to 43ºC, water working temperature is from 7ºC to 60ºC.

The temperature exchange efficiency and enthalpy exchange efficiency are tested under these testing conditions as below:

1). Cooling capacity: air : DB: 27ºC, WB: 19.5ºC, water temperature: intake : 7ºC, outlet:12ºC.

2).Heating capacity: air :DB:21ºC, Water temperature: intake 60ºC, the water-flow volume is same as Cooling capacity .

3).Freeze-up : air : DB: 27ºC, WB: 24ºC, water temperature: intake : 6ºC, outlet: 9ºC.

4).Sound power level according to ISO 5151.Sound pressure level are calculated at the below of air-outlet 1m and 1m distance. The noise are tested before leaving factory.

For 50 Hz :

The FCU designed for installation indoor. The environmental temperature is from 5ºC to 43ºC, water working temperature is from 7ºC to 60ºC.

The temperature exchange efficiency and enthalpy exchange efficiency are tested under these testing conditions as below:

1).Cooling capacity: air: DB: 27ºC, WB: 19ºC, water temperature: intake : 7ºC, outlet: 12ºC.

2).Heating capacity: air: DB: 21ºC , Water temperature: intake :50ºC, outlet: 40ºC.

3).Freeze-up : air : DB: 27ºC, WB: 24ºC, water temperature: intake : 6ºC, outlet: 10ºC.

4).Sound power level according to ISO 5151.Sound pressure level are calculated at the below of air-outlet 1m and 1m distance. The noise are tested before leaving factory.

Все каталоги и инструкции здесь: https://splitsystema48.ru/instrukcii-po-ekspluatacii-kondicionerov.html

CONTROL

Все каталоги и инструкции здесь: https://splitsystema48.ru/instrukcii-po-ekspluatacii-kondicionerov.html

CONTROL

1. WIRELESS REMOTE CONTROLLER

1.1 YB1F2(X-FAN)

Note: Be sure that there are no obstructions between receiver and remote control; Don't drop or throw the remote control; Don't let any liquid in the remote control and put the remote control directly under the sunlight or any place where is very hot.

Signal transmitter

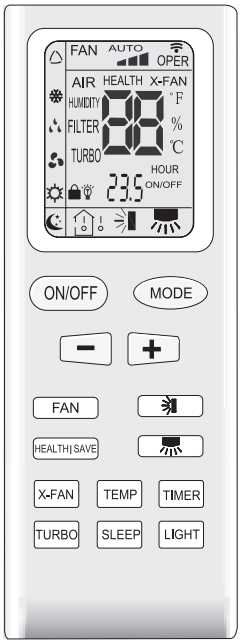

Remote control

ON/OFF

ON/OFF button

- Press this button, the unit will be started or stopped, which can clear the timer or sleeping function of last time.

MODE

Mode button

- Press this button, the running mode will change as below.

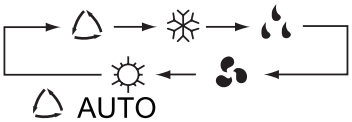

AUTO

COOL

DRY

FAN

HEAT (Note:no for coolling only unit)

(+/−)

TEMP. (+/−) button

- When press +button , the setting temp. will be increased by 1℃ ,When press -button,the setting temp. will be decreased by 1 ℃ The temp. will be changed quickly by pressing the button continuously and setting temp. range is 16～30℃。

FAN

FAN speed button

- Press this button once, fan speed will change as below: Auto → → → →

Low speed Middle speed

High speed

Note:Under the Dry mode, the fan speed isn't adjustable, low fan speed is imperative, but when operating this button, the wireless remote control will send this signal.

Swing up and down button

- Simpleness swing mode is defaulted for wireless remote control, in this mode, press this button, could turn on or turn off the Up and down swing function.
- When unit is turned off, synchronously press "+" and Up and down swing buttons, it could be switched between the simpleness swing mode and stationary swing mode, at this time, blinks 2 seconds.
- In Stationary swing mode, press this button,the angle for Up and down swing as show in below:

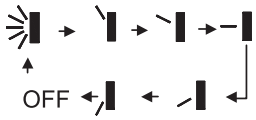

- When up and down swing louver is working, when turn off the unit, the siwng louver will immediately stop at current position. shows up and down swing louver swings back and forth as show in the above figure.

Все каталоги и инструкции здесь: https://splitsystema48.ru/instrukcii-po-ekspluatacii-kondicionerov.html

NOTE: This Remote control is universal, it could be used formany units, some buttons of this control which are not available to this unit will not be described below.

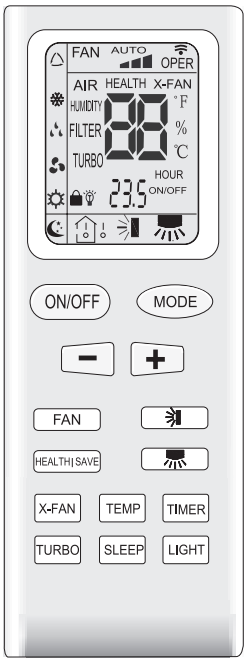

Remote control

HEALTH | SAVE

HEALTH | SAVE button

- HEALTH function:there is no this function for this unit. If press this key, the main unit will click, but it also runs under original status.
- Save energy function: this unit has no this function, press this button, the mian unit will click, "SE" will be displayed on the LCD of wireless remote control, fan speed automatically rotates, when repress this button, the fan speed will run at previous setting fan speed.

TURBO

Turbo button

- Set turbo on or off(the characters of turbo will appear or disappear) by pressing this key under cooling or heating mode.Once energized, the unit will be defaulted to be turbo off. This function can not be set under auto, dehumidify or fan mode, and characters of turbo won't appear.

TIMER

Timer button

- On the status of the unit on, press this button to set timer off. On the status of the unit off, press this button to set timer off. Press this key once, words Hour on(off) will appear and flicker. In which case, press +/- button to adjust time (press+/- button continuously to change timing value quickly), the setting time range is from 0.5 to 24 hr.; press this key once again to fix the time, then remote controller will send out the signal immediately and hour on/off will stop flickering. If the time of that no press timer button under flickering status is above 5s,the timer setting will quit. If the timer has been set, press this button once again to quit it.

Left and right swing button

- Simpleness swing mode is defaulted for wireless remote control,in this mode, press this button, could turn on or turn off the Left and right swing function
- When unit is turned off, synchronously press "+" and Left and right swing buttons, it could be switched between the simpleness swing mode and stationary swing mode, at this time, blinks 2 seconds.
- In Stationary swing mode, press this button,the angle for Left and right swing as show in below:

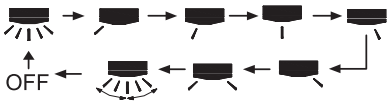

- When left and right swing louver is working, when turn off the unit, the siwing louver will immediately stop at current position. shows left and right swing louver swings back and forth as show in the above figure.

Все каталоги и инструкции здесь: https://splitsystema48.ru/instrukcii-po-ekspluatacii-kondicionerov.html

NOTE: This remote control is universal, it could be used formany units, some buttons of this control which are not available to this unit will not be described below.

Remote control

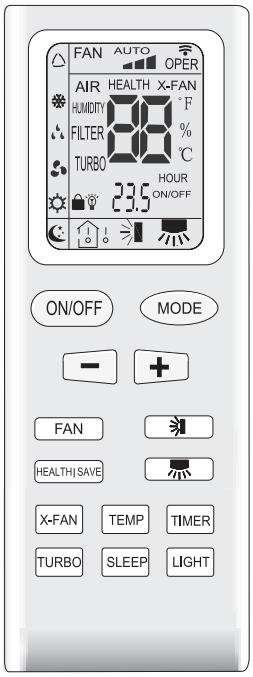

SLEEP

Sleep button

- Press this button, enter into SLEEP state, when repressed, it will quit. The sleep function will be canceled with the stop of the unit. There is no SLEEP function under AUTO and FAN mode. is the icon for sleep function.
- At COOL, X-FAN mode: the SLEEP mode runs after 1hour, the setting temp. will be increased by 1℃, 2 hour later, setting temp. will be increased by 2℃ and then will run at this setting temperature.
- At HEAT mode: the SLEEP mode runs after 1hour, the setting temp will be decreased by 1℃, 2 hours later setting temp. will be decreased by 2℃, then it will run at setting temperature.

X-FAN

X-FAN button

- Pressing X-FAN button in COOL or DRY mode,the icon "X-FAN" is displayed and the indoor fan will continue operation for 10 minutes in order to dry the indoor unit even though you have turned off the unit. After energization,X-FAN OFF is defaulted. X-FAN is not available in AUTO,FAN and HEAT mode.
  Note: X-FAN is the alternative expression of BLOW for the purpose of understanding.

LIGHT

Light button

- Press this button to select LIGHT on or off in the displayer. When the LIGHT on is set,the icon will be displayed and the indicator light in the displayer will be on. When the LIGHT off is set, the icon will be displayed and the indicator light in the displayer will be off.

TEMP

Temp. display button

- After powered on, displaying presetting temperature is defaulted,(According to customer requirements to display,if there are no requirements,the presetting temperature displaying is defaulted, there is no signal display on the remote control). Press this button, (display), display the presetting temperature; (display), display indoor ambient temperature, will not change current display status. If current display status is indoor ambient temp. when received other remote control sginal, then will display presetting temp., 5s later return to ambient temp. display.
  Other models haven't this function. But pressing this button, the main unit will click and keep the original status.

Все каталоги и инструкции здесь: https://splitsystema48.ru/instrukcii-po-ekspluatacii-kondicionerov.html

1.1.1 Guide for operation-general operation

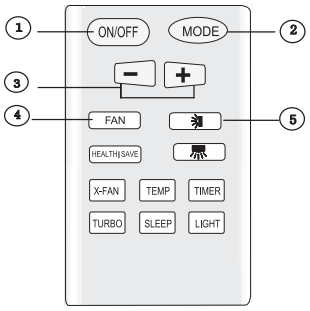

① . Press ON/OFF button to start the unit after poweringthe main unit on.(Note: Power the unit on every time,the big-guide louver and small-guide louver will beclosed firstly.)

② . Press MODE button to select desired running mode.

③ . Press +/ - button to set the desired temperature.(It is unnecessary to set the temperature at AUTO mode)

④ . Press FAN button to set fan speed, the AUTO FAN,LOW, MID or HIGH could be selected.

⑤ . Press and button to set swing mode.

1.1.2 Guide for operation-optional operation

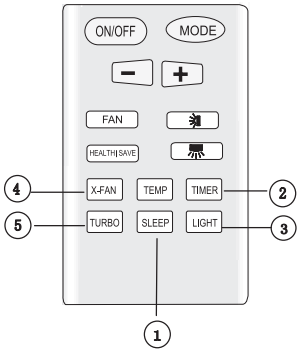

① . Press SLEEP button, set the sleep mode.

② . Press TIMER button, then press +/- button,
to set the cheduled timer on or timer off.

③ . Press light button to control displayer light on or off.

④ . Press X-FAN button to set X-FAN function on or off.

⑤ . Press turbo button to set this function on or off.

1.1.3 Introduction for special function

● About X-FAN function

This function indicates that moisture on evaporator of indoor unit will be blowed after the unit About X-FAN functionis stopped to avoid mould.

Having set X-FAN function on: After turning off the unit by pressing ON/OFF buttonindoor fan will continue running for about 10 min. at low speed. In this period, press X-FAN button to stop indoor fan directly.2. Having set X-FAN function off: After turning off the unit by pressing ON/OFF button, the complete unit will be off directly.

● About AUTO RUN

When AUTO RUN mode is selected, the setting temperature will not be displayed on the LCD, the unit will be in accordance with the room temp. automatically to select the suitable running method and to make ambient comfortable.

● About turbo function

If start this function, the unit will run at super-high fan speed to cool or heat quickly so that the ambient temp. approachs the preset temp. as soon as possible.

● About lock

Press +and - buttons simultaneously to lock or unlock the keyboard. If the remote controller is locked, the icon will be displayed on it, in which case, press any button, the mark will flicker for three times. If the keyboard is unlocked, the mark will disappear.

● About switch between Fahrenheit and Centigrade

Under status of unit off, press MODE and - buttons simultaneously to switch ºC and ºF.

● About new function of defrosting

It indicates: after starting this function by remote controller and the unit has been under defrost status, If turn off the unit by remote controller, the unit will not stop defrosting until it is finished; if change setting mode by remote controller, the function ,which is set last time, won't be carried out until defrosting finished.

Operation of this function on or off: If remote controller is under off status, press mode button and X-FAN button simultaneously in order to enter or cancel this new function. If the unit is under defrost mode, dual eight position on remote controller will display H1.If switch to heat mode, the position will display H1, which flickers for 5s, in which case, press +/- button, H1 will disappear and setting temp. be displayed.

After remote controller is powered on, the new defrost function will be defaulted to be closed.

3.4 Changing batteries and notices

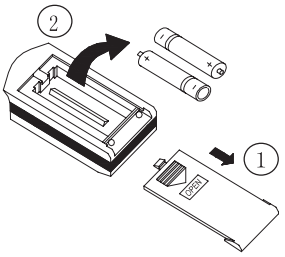

① . Slightly to press the place with OPEN along the arrowhead direction to push the back cover of remote control.(As shown in Fig. ①)

② . Take out the old batteries, insert two AAA alkaline cells.(AS shown in Fig ②③ .).

③ . Attach the back cover of remote control.(Fig ④)

Все каталоги и инструкции здесь: https://splitsystema48.ru/instrukcii-po-ekspluatacii-kondicionerov.html

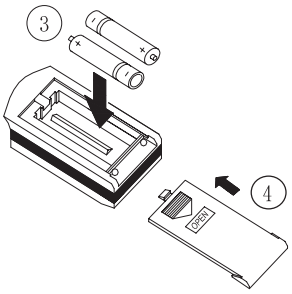

NOTE:

♦ When changing the batteries, do not use the old ordifferent batteries, otherwise, it can cause the malf-unction of the wireless remote control.

♦ If the wireless remote control will not be used for along time, please take them out, and don't let the leakage liquid damage the wireless remote control.

♦ The operation should be in its receiving range.

♦ It should be placed where is 1m away from the TVset or stereo sound sets.

♦ If the remote control cannot operate normally, please take the batteries out, and then reinsert it 30s later; ifit is also abnormal ,please replace the batteries.

♦ If the main unit needs to be remote controlled, please aim remote control at the receiver of main unit in orderto improve the receiving sensitivity of the main unit.When the remote control sends out signal, a mark will flicker for about 1s. The bell will ring if the main unit receives effective signal.

♦ When the remote control sends out signal, a mark will flicker for about 1s. The bell will ring if the main unit receives effective signal.

1.2 YB1FA(X-FAN)

Note:

♦ Be sure that there are no obstructions between receiver and remote control; Donot drop or throw the remote control; Don't let any liquid drop into the remote control or leave the remote control under the sunlight or place where is very hot.

♦ This is a general remote control, it could be used for multiple types (functions) of air conditioners. For some models without the functions specified here, we preserve the right to not to inform exclusively.

AUTO
COOL
DRY
FAN
HEAT

● ON/OFF button

Press ON/OFF button to turn on/off the unit. When the unit is turned off, the Timer, Sleep function will not be retained in memory, but the time will be retained and is still displaying.

● MODE button

Press this button, Auto, Cool, Dry, Fan Heat mode can be selected circularly.

Auto mode is not available in this mode.

● SLEEP button

Press this button to select Sleep On/Sleep Off. If power is on, Sleep Off is default. If the unit is turned off, the Sleep function setting will be not retained in memory. If Sleep function is on, the mark of Sleep will display. In this mode, the time of timer can be adjusted. Under Fan and Auto modes, this function is not available.

● FAN button

Press this button, Auto, Low, Medium, High-speed can be circularly selected. After powered on, Auto fan speed is default. Under Dehumidify mode, Low fan speed is default.

Все каталоги и инструкции здесь: https://splitsystema48.ru/instrukcii-po-ekspluatacii-kondicionerov.html

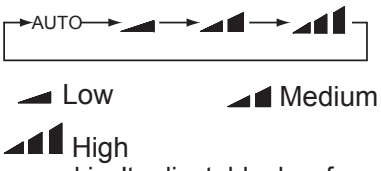

Note: Under the Dry mode, the fan speed isn't adjustable, low fan speed is default.

● CLOCK button

Press Clock button to set the time of clock. When ◷ blinks and displays, you can set the time by pressing + or - button. If no button is pressed within 10 seconds the remote will revert back to the normal display. Press ◷ again to accept the setting. If it is set the first time, 12:00 is the initial value. Note: If mark ◷ displays on the LCD, it means it is the time of clock, if not, it is the time of timer.

● LIGHT button

Press this button to select LIGHT On/Off in the displayer. When the LIGHT On is set,the mark 💡 will be displayed and the indicator light in the displayer will be on. When the LIGHT Off is set, the mark 💡 will disappear and the indicator light will be off.The function is not available for this mode.

● X-FAN button

Press this button to turn on/off the X-FAN function.

The function is not available for this mode.

● - button

Presetting temperature can be decrease the temperature by 1 degree Celsius once. press and hold for more than two seconds so that we can change the temperature continuously. The minimum and maximum setting range of the temperature is 16 to 30 degree Celsius.

● + button

Press this button increase the temperature by 1 degree Celsius once. Press and hold for more than two seconds so that we can change the temperature continuously. The minimum and maximum setting range of the temperature is 16 to 30 degree.

● TEMP button

Press this button to select the display of either indoor setting temperature or indoor ambient temperature. When the indoor unit powered on firstly, setting temperature display is default. Change status to to display the ambient temperature. If received control signal in 5 seconds, the display temp.will revert back to setting temperature. When unit is off, indoor setting temperature display is default. Note: This function is only available for certain models.

● TURBO button

In Cool or Heat mode, press this button to turn on/off the Turbo function.

Note: This is a general remote control, it could be used for multiple types (functions) of air conditioners. For some models without the functions specified here, we preserve the right to not to inform exclusively.

● SWING UP AND DOWN button

Press this button to adjust swing angle, which circularly changes as below:

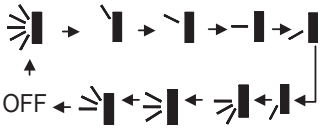

This is a universal wireless remote controller; however, the unit covered in this manual is only of the simplified SWING function. As a result, when the wireless remote controller is energized initially with the unit under the OFF status, this simplified function should be set by pressing the + button and the SWING button simultaneously, with the symbol blinking twice. Then, after the unit is turned on, this function can be activated or deactivated simply by pressing the SWING button, with the displayed symbol indicating this function is on and without this displayed symbol indicating this function is off.

● TIMER ON button

Press the TIMER ON button to set the timed On. Press +/- once to increase or decrease the minute by 1 minute. If pressed and held for 2 seconds, the minute will increase or decrease constantly by 1 minute. If held constantly for more than 5 seconds, the minute will begin to change in every 10 minutes. Press TIMER ON again to accept the setting and ON will show besides the time of clock meaning the setting succeeds. Press the

Все каталоги и инструкции здесь: https://splitsystema48.ru/instrukcii-po-ekspluatacii-kondicionerov.html

TIMER ON again to cancel the setting.

TIMER OFF button

Press the TIMER OFF button to set the timed off. The procedures are similar as above.

1.2.1 Operation of wireless remote control

1). Guide for operation – General operation

a. Press SLEEP button to set the sleep state.

b. Press TIME ON and TIME OFF button to scheduled the unit ON/OFF.

c. Press LIGHT button to control on and off the indicator board.(This function maybe not available for some units.)

2). Guide for operation-Optional operation

a. After powered on, press ON/OFF button, the unit will start to run.

(Note: When it is powered off , the guide louver of main unit will close automatically.)

b. Press MODE button, select desired running mode ,or press COOL or HEAT mode to enter the corresponding operation directly.

c. Press + or-button to set the desired temperature.

d. Press FAN button to set fan speed from AUTOFAN , LOW , MID and HIGH.

e. Press button to select SWING mode.

f.Press +and - buttons simultaneously to lock or unlock the wireless remote control. If it is locked, the mark will display; when pressing any button, the mark will blink for three times but the air conditioner has no respondence. If unlocked, the mark will disappear.

g. Switch between Fahrenheit and Centigrade.

When unit is under Off state, press MODE and – button simultaneously to switch between ºC and ºF.

1.2.2 Changing batteries and notices.

Slightly to press the place with OPEN , along the arrowhead direction to push the back cover of wireless remote control. (As show in figure)

Take out the old batteries. (As show in figure.)

Insert two new AAA1.5V dry batteries, and pay attention to the polarity. (As show in figure)

Attach the back cover of wireless remote control. (As show in figure)

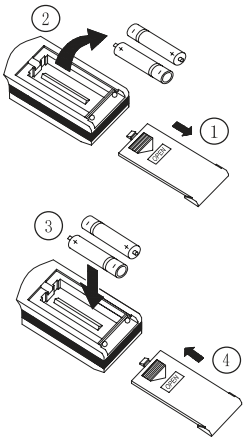

Sketch map for changing batteries

NOTE:

♦ The design of this unit conforms to the requirements of ISO5151 standard.

♦ The air volume is measured at the 0Pa external static pressure.

♦ Cooling (heating) capacity stated above is measured under nominal working conditions corresponding to 0Pa external static pressure. The parameters are subject to change with the improvement of products, in which case the values on the nameplate will prevail.

Все каталоги и инструкции здесь: https://splitsystema48.ru/instrukcii-po-ekspluatacii-kondicionerov.html

2. WIRED REMOTE CONTROLLER

2.1 Introduction to Z5K351(optional)

NOTE: Never install the wired remote controller in a place where there is water leakage.
Avoid bumping, throwing, tossing or frequently opening the wired remote controller.

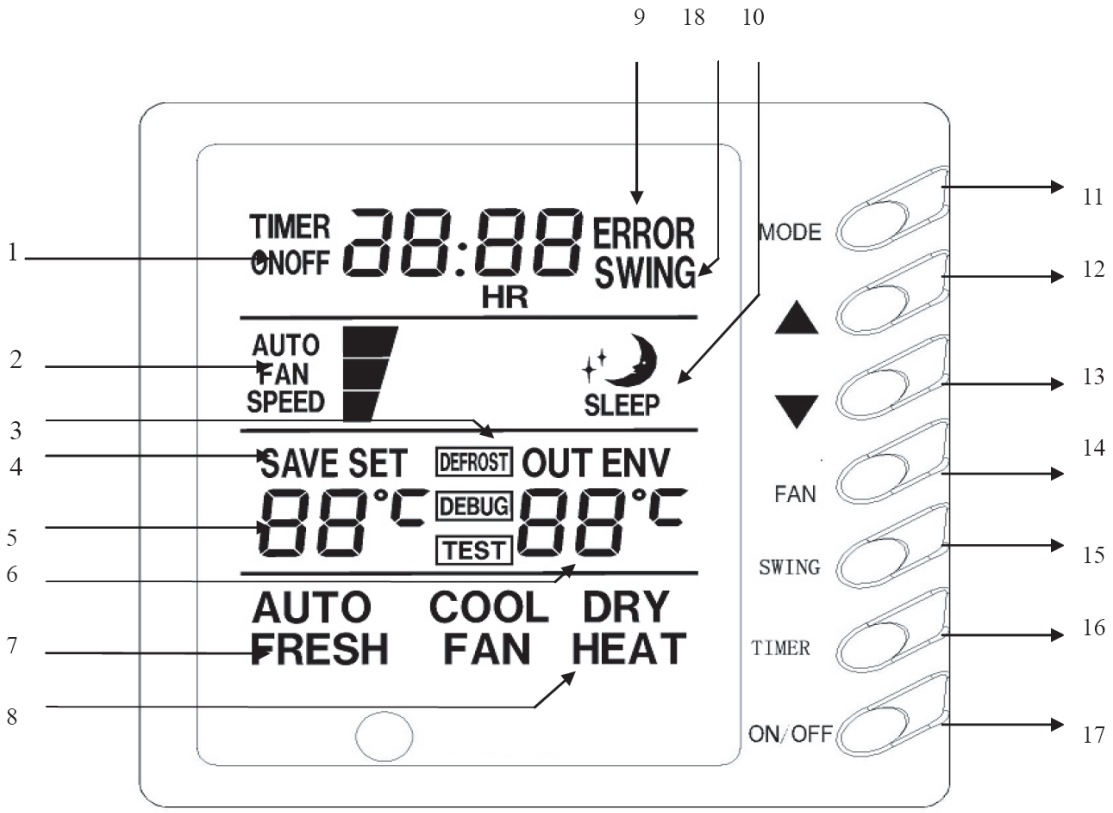

1	Time display	10	Sleep display
2	Fan speed display(Auto, High, Middle, Low)	11	MODE button
3	Defrosting display	12	Button for temp. increase
4	Saving state display	13	Button for temp. decrease
5	Set temp. display	14	FAN button
6	Ambient temp. display	15	SWING button
7	Fresh air display	16	TIMER button
8	Mode(COOL, DRY, FAN, AUTO)	17	ON/OFF button
9	Malfunction display	18	Display of Swing state

Все каталоги и инструкции здесь: https://splitsystema48.ru/instrukcii-po-ekspluatacii-kondicionerov.html

2.2 Introduction to Z4E351B (optional)

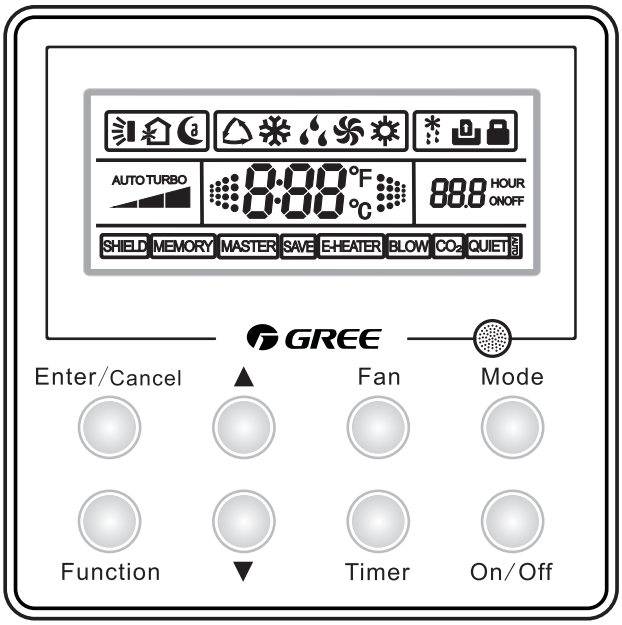

2.2.1 Symbols on the LCD

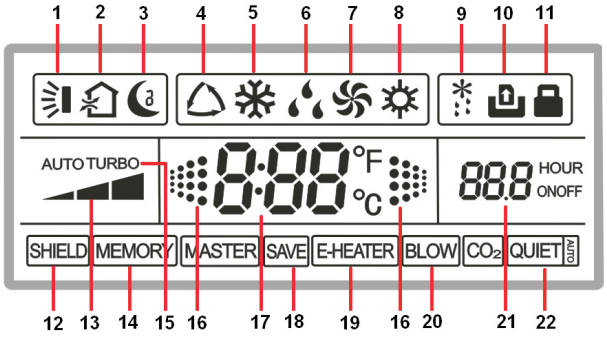

Introduction to the Symbols on the LCD.

No.	Symbol	Function Description
1		It indicates the swing function.
2		It indicates the function of air exchange. (It is unavailable for this wired controller.)
3		It indicates the sleeping status.
4		It indicates each running mode of the indoor unit (AUTO mode). (It is unavailable for this wired controller.)
5		It indicates the " **Cool** " mode.
6		It indicates the " **Dry** " mode.
7		It indicates the " **Fan** " mode.
8		It indicates the " **Heat** " mode.
9		It indicates the defrosting mode. (It is unavailable for this wired controller.)
10		It indicates the gate control status.
11		It indicates the locking status.
12	SHIELD	It indicates the shield status. (It appears when all functions, or the function "**On/Off** ", " **Temp** ", " **Mode** ", or " **Save** " is shielded through the Long-distance monitoring System.)
13		It indicates the current fan speed.

Все каталоги и инструкции здесь: https://splitsystema48.ru/instrukcii-po-ekspluatacii-kondicionerov.html

14	MEMORY	It indicates the memory function is activated, that is, the unit will back to the previous set status after powered on again.
15	TURBO	It indicates the turbo status.
16		It flashes animatedly when the unit is started and the ambient temperature is displayed.
17	88.88 °F °C	It indicates the ambient temperature/set temperature.
18	SAVE	It indicates the energy saving status.
19	E-HEATER	It indicates that the auxiliary electric heater can be activated.
20	BLOW	It indicates the blow function is activated.
21	88.8 HOUR ONOFF	It indicates the timer status.
22	QUIET AUTO	It indicates the quiet operation status. (including two statuses, " **Quiet** " and " **Auto Quiet** ".)
Note: Symbols " MASTER " and " CO_2" will not displayed on the LCD of the wired controlled XK26.		

2.2.2 Introduction to the Functions of the Press Keys

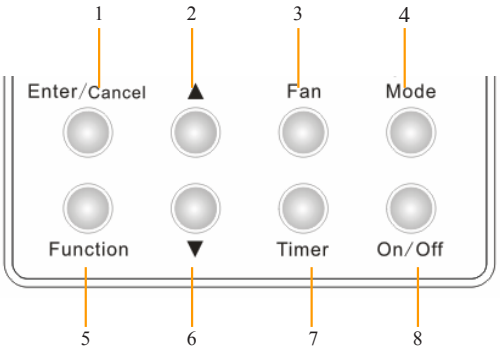

Introduction to the Functions of the Press Keys.

No.	Press Bottoms	Function Description
1	Enter/Cancel	It is used to select the desired function or cancel the selected function.
2	▲	(1) It is used to adjust the running temperature of the indoor unit among16~30℃ . (2) It is used to adjust the temperature under the energy saving condition among16~30℃ . (3) It is used to adjust the timer among 0.5~24 hours. (4) It is used to switch between the modes of " **Quiet** " and "**Auto Quiet** ".
6	▼	
3	Fan	There are four fan speed options, High, Medium, Low and Auto.
4	Mode	(1) It is used to set the mode of " **Cool** "," **Dry** ", " **Fan** ", and " **Heat** ". (2) When the "**Save**" function is being set, it is used to switch between the mode options of " **Heat** " and " **Cool** ". (3) When the " **Timer** " is being set, it is used to switch between the options of "**Unit On**" and "**Unit Off**".
5	Function	It is used to switch the functions of "**Swing**", "**Sleep**", "**Turbo**", "**Save**", "**E-Heater**", "**Blow**", "**Quiet**", etc.
7	Timer	It is used to set the timer.
8	On/Off	It is used to start/stop the indoor unit.
4 +2	Mode +▲ (MEMORY)	Under the " **Off** " status of the unit, press "**Mode**" and "▲" simultaneously for five seconds to activate or deactivate the "**MEMORY**" function. (once this function is activated, the unit with power failure will resume the previous set status after powered on again; otherwise it will go to the "**Off** " status.)
2 +6	▲+▼ (LOCK)	Press "▲" and "▼" simultaneously for five seconds to go to the lock status, in which case the press on any other key will get no response. And another press on "▲" and "▼" for five seconds will quit this status.
5+ 7	Function +Timer (Ambient Temperature Sensor; Anti Cold/ Hot Air)	Under the "**Off** " status of the unit, press " **Function** " and " **Timer** " simultaneously for five seconds to call out the debugging menu, after that press " **Mode** " to select the desired submenu and press "▲"/"▼" to set the parameter, finally press " **Enter/Cancel** " to save the setting and quit the setting status.
4 +6	Mode +▼	Under the "**Off** " status of the unit, press " **Mode** " and "▼"simultaneously for five seconds to switch the Celsius scale and Fahrenheit scale.

Все каталоги и инструкции здесь: https://splitsystema48.ru/instrukcii-po-ekspluatacii-kondicionerov.html

INSTALLATION

Все каталоги и инструкции здесь: https://splitsystema48.ru/instrukcii-po-ekspluatacii-kondicionerov.html

INSTALLTION

1. SELECTION THE MOUNTING POSITION

Especially, the installation place is very important for the fan coil unit because it is very difficult to move from placc aftr the first installation.

Decide the mounting position together with the customer as follows:

The discharge direction can be selected as shown below.

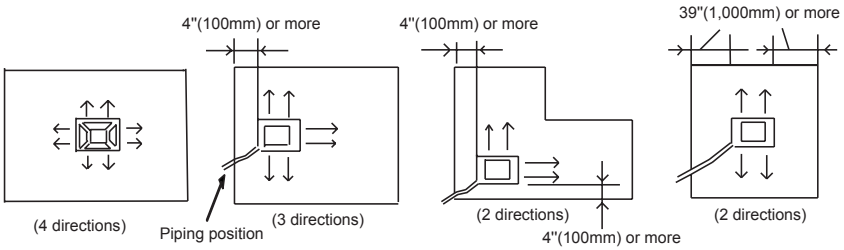

Since 2 -way outlet causes performance problems, do not set it .

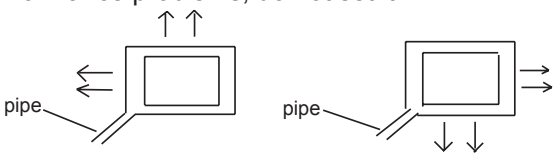

Install the indoor unit on a place having a sufficient strength so that it with stands against the weight of the indoor unit.

The inlet and outlet ports should not be obstructed; the air should be able to blow all over the room.

Leave the space required to service the air conditioner.

The ceiling rear height is 9-3/8 " inches(250mm) or more.

A place from where the air can be distributed evenly throughout the room by the unit.

A place from where drainage can be extracted outdoor easily.

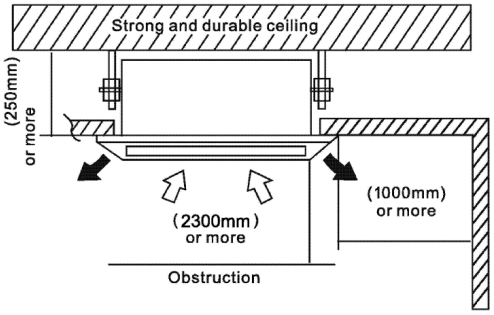

1.1Ceiling opening and suspension bolt (M l0) pitch flemension

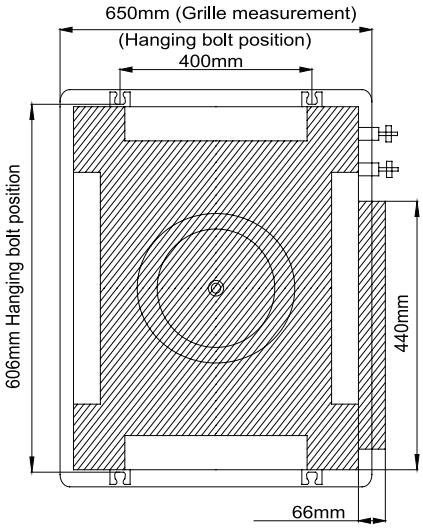

Be suitable for:
FP-51XD-E
FP-68XD-E

Все каталоги и инструкции здесь: https://splitsystema48.ru/instrukcii-po-ekspluatacii-kondicionerov.html

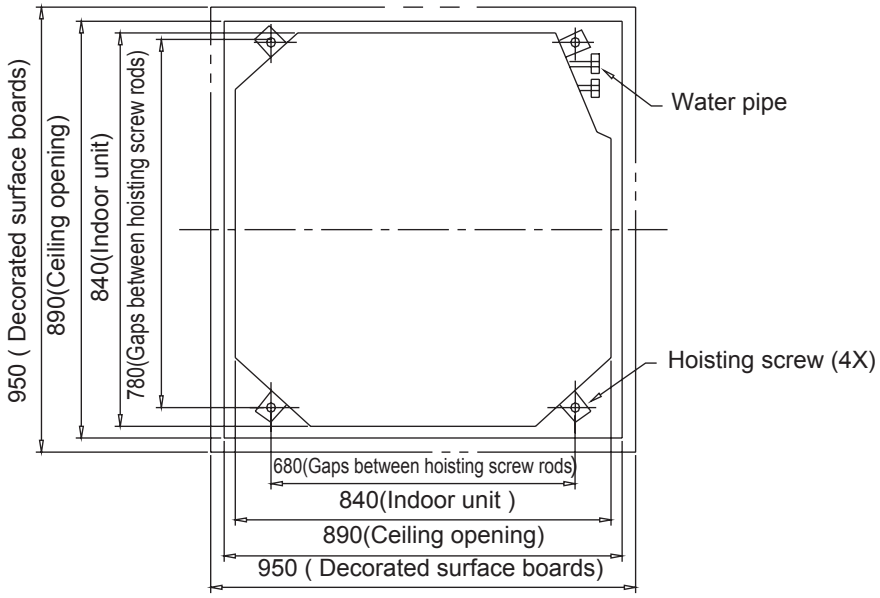

Be suitable for:

P-85XD/B-T; FP-102XD/B-T; FP-125XD/B-T; FP-140XD/B-T; FP-160XD/B-T; FP-180XD/B-T; FP-200XD/B-T; FP-10XD–E; FP-12.5XD-E; FP-14XD-E; FP-16XD-E; FP-18XD-E;P-8XD/A-E; FP-10XD/A–E; FP-12.5XD/A-E; FP-14XD/A-E;FP-16XD/A-E; FP-18XD/A-E;FP-85XD/B-T; FP-102XD/B-T: FP-125XD/B-T; FP-140XD/B-T; FP-160XD/B-T; FP-180XD/B-T; FP-200XD/B-T.

2. DRAINAGE PIPE

The diameter of the drain pipe should be greater than of equal to the diameter of the connecting pipe [vinyl tube, pipe size: Outer diameter 25mm (outer dimension)].

Keep the drainage pipe short and sloping downwards at a gradient of at least 1/100 to prevent air pockets from forming.

If the drainage hose cannot be sufficiently set on, add a drainage raising pipe.

To keep the drainage hose from sagging, keep space between hanging hooks at 1~1.5m.

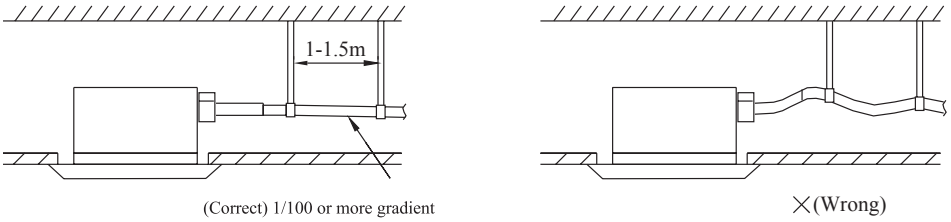

Use the drain hose and clamp attached. Insert the drain hose to the drain vent, and then tighten the clamp.

Entwine the big sponge on the clamp of drain hose to insulate heat.

Heat insulation should be done to indoor drain hose.

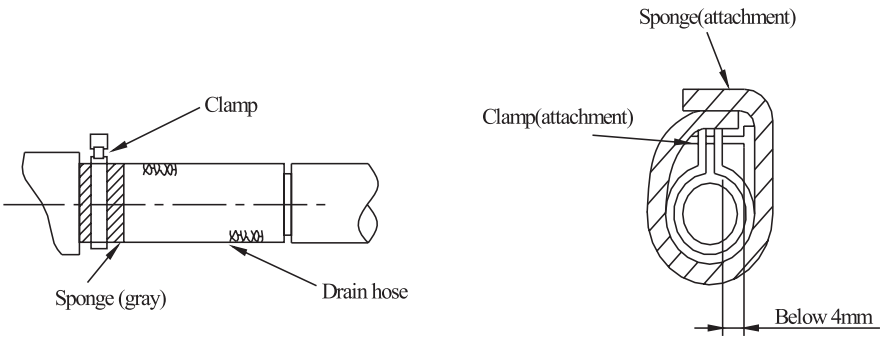

3. PRECAUTIONS FOR DRAINAGE RAISING PIPE

The install height of the drain raising pipe should less than 280mm.

Все каталоги и инструкции здесь: https://splitsystema48.ru/instrukcii-po-ekspluatacii-kondicionerov.html

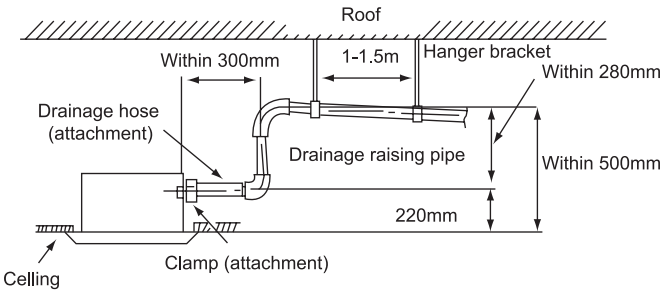

The drain raising pipe should form a upright angle with the unit, and distance to unit should not beyond 300mm.

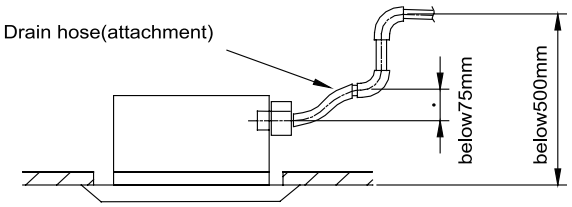

3.1 Instruction

♦ The slant gradient of the attached drain hose should be within 75mm so that the drain hole doesn't has to endure the unnecessary outside force.

♦ Please install the drain hose according to the following process if several drain hoses join together.

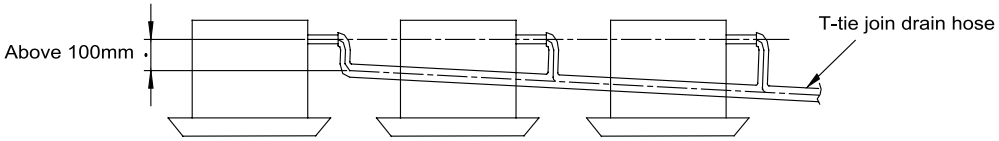

The specs of the selected join drain hose should fits the running capacity of the unit

♦ The installation of the motorized valve should be done according as .Firstly connect one end of the tube joint with the water inlet tube of the unit, then connect the other end with the motorized valve, and lastly connect the motorized valve with the flare nut . During the installation, both the torque wrench and the spanner should be used and the moment of torque should be within 90 N.m. Besides, a secure connection should be guaranteed.

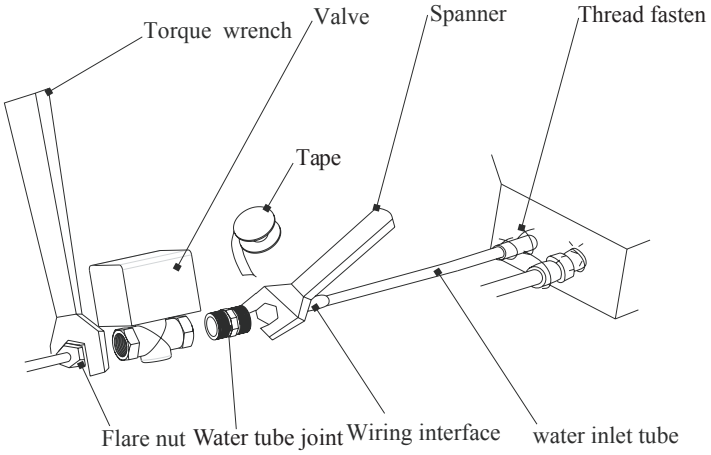

♦ Both the tube joint and the motorized valve are G3/4" threaded. Prior to the connection, it is recommended to wrap the tacky tape on the thread for two or three cycles for better sealing effects .

♦ After the tube joint, motorized valve, water inlet tube, water outlet tube are connected reliably, start the water pump of the outdoor unit to check if they leak or not.

♦ What should be done lastly is wrapping sponge around the motorized valve and the tube for heat insulation.

Все каталоги и инструкции здесь: https://splitsystema48.ru/instrukcii-po-ekspluatacii-kondicionerov.html

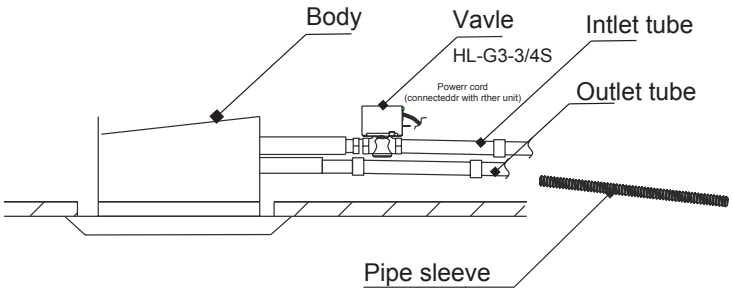

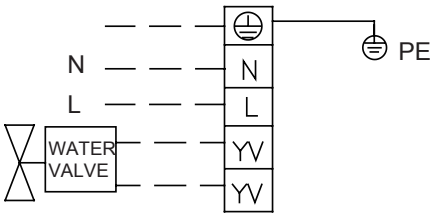

- Check the smoothness of drain after installation.
- Check the drain state by imitating 600cc water slowly from the outlet vent or test hole.
- Check the drain in the state of refrigerating after installation of the electric circuit.

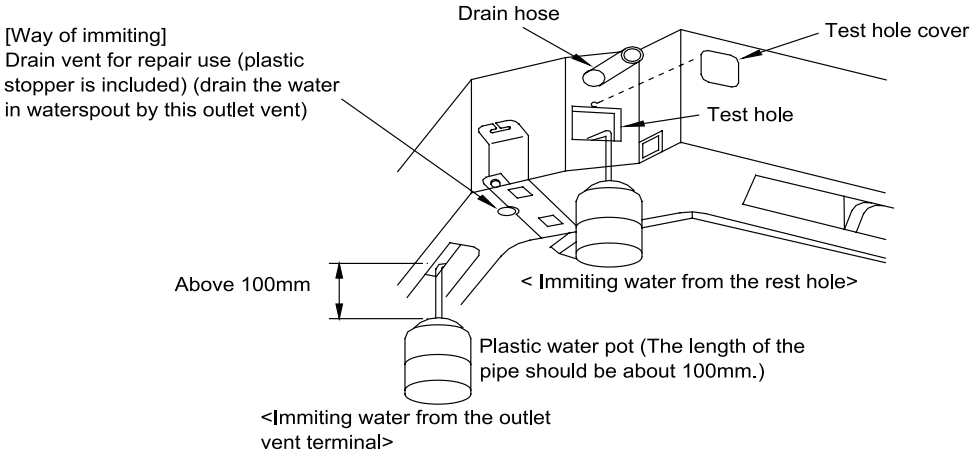

Warning: Before obtaining access to terminals, all supply circuits must be disconnected.

4. ELECTRIC WIRING

1. All field supplied parts and materials must conform to local laws and regulations.
2. For electric wiring, refer to WIRING DIAGRAM attached to the unit body.
3. All wiring must be performed by a skilled technician.
4. A circuit breaker capable of shutting down power supply to the entire system and which have at least mm contact separation in each jole must be installed in the fixed wiring.
5. Earth properly.
6. Wiring must conform to national laws and regulations.
7. The fixed wiring must be installed with a protector with no more that 30 mA leakage current.
8. If the supply cord is damaged, it must be replaced by the manufactory or its service agents or a similarity qualified person in order to avoid a hazard.

4.1 Wiring of unit and the controller

4.1.1 Wiring of the indoor unit

Remove the control box lid, pull the wires inside through rubber bush and wiring according to the WIRING DIAGRAM, then tighten it with clamp.

Wiring of the controller

- Remove the control box lid, pull wires inside through rubber bush and connect to the controller.
- Wrap the wire with sealing pad.
- After wiring, tighten it with clamp and fix the control box lid.
- Heating and cooling: connect the rubber wire (5-cords) to the power supply terminal board in properly.
- Cooling: connect the rubber wire (3-cords) to the power supply terminal board properly.

Все каталоги и инструкции здесь: https://splitsystema48.ru/instrukcii-po-ekspluatacii-kondicionerov.html

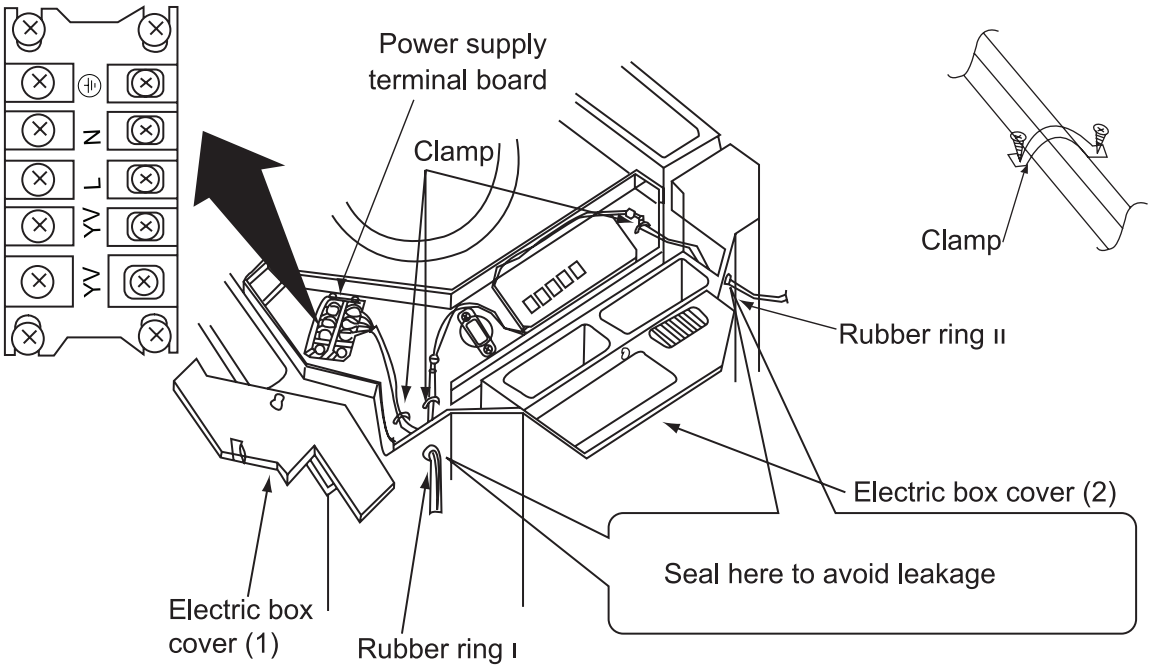

Precautions: Be sure to connect the indoor unit and outdoor unit at right poles.

5. INSTALLATION OF PANEL

Set the panel to the indoor unit body by matching the position of the swing flap motor of the decoration panel to the piping position of the indoor unit as shown as below.

Install the decoration panel.

1. Hang the latch, which is located on the opposite side of the swing flap motor on the panel, temporarily to the hook of the indoor unit. (2 Positions)
2. Temporarily hang the remaining 2 latches to the hooks on the sides of the indoor unit.(be careful not to let the swing motor lead wire get caught in the sealing material.)
3. Screw all 4 hexagon head screws located right beneath the latches in approximately 15mm.(panel will rise)
4. Adjust the panel by turning it to the arrowed direction in Fig.4 so that the ceiling opening is completely covered.
5. Tighten the screws until the thickness of the sealing material between the panel and the indoor unit.
6. Body is reduced to 5~8 mm.

Все каталоги и инструкции здесь: https://splitsystema48.ru/instrukcii-po-ekspluatacii-kondicionerov.html

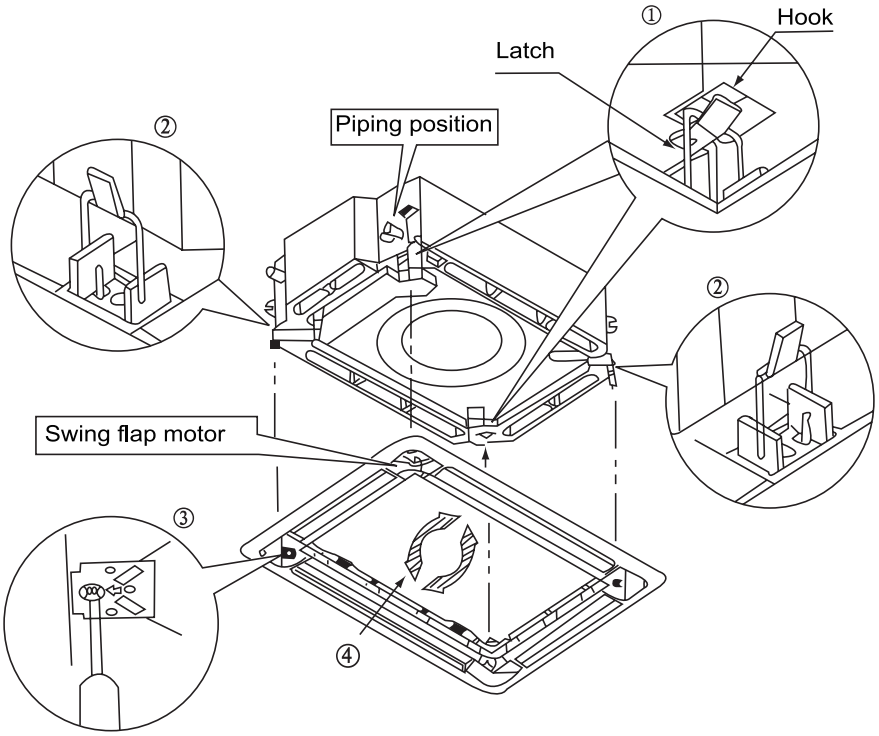

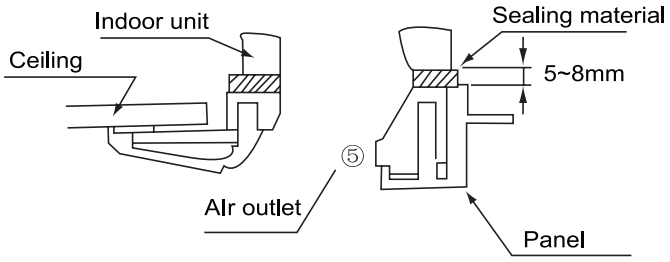

5.1 Precautions

Improper screwing of the screws may cause the troubles.

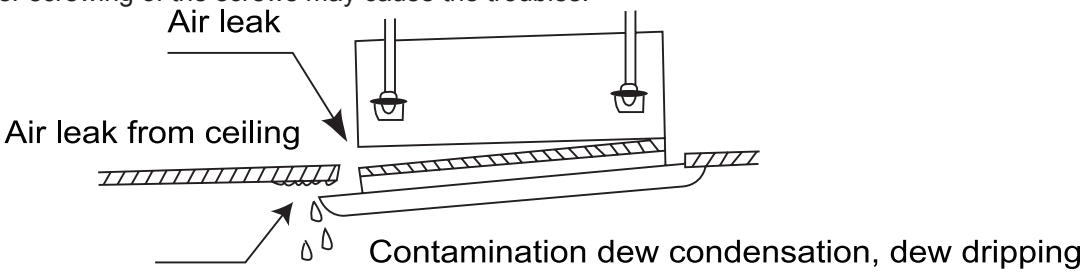

If gap is still left between the ceiling and the panel after screwing the screws, readjust the height of the indoor unit body.

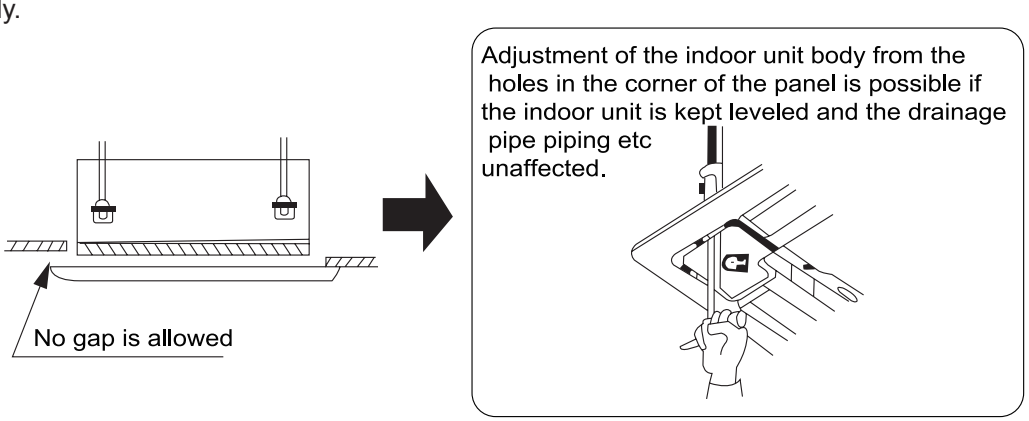

Все каталоги и инструкции здесь: https://splitsystema48.ru/instrukcii-po-ekspluatacii-kondicionerov.html

5.2 After fixing be sure no gap left between the ceiling and the panel

Wiring of the decoration panel.
Connect the joints for swing flap motor lead wire (at 2 places) installed on the panel.

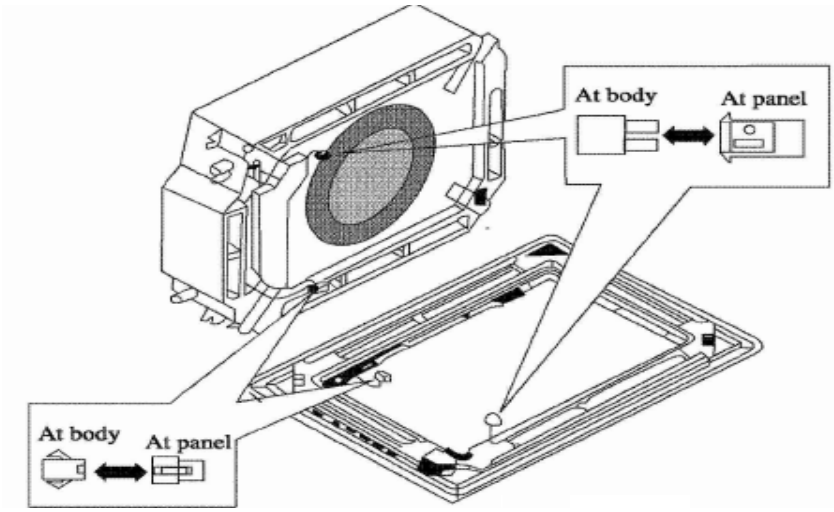

Все каталоги и инструкции здесь: https://splitsystema48.ru/instrukcii-po-ekspluatacii-kondicionerov.html

MAINTENANCE

Все каталоги и инструкции здесь: https://splitsystema48.ru/instrukcii-po-ekspluatacii-kondicionerov.html

MAINTENANCE

1.TROUBLESHOOTING

Panel TB03 displaying the error code :

Error code	Error
E0	Water pump error
E6	Communications error
F0	Indoor temperature sensor error at the return air inlet
F1	Evaporator temp. sensor error
F5	Indoor temperature sensor error at the wire controller
E9	Full water protection
FE	Entering cooling temp. sensor error of the evaporator

2.CARE AND MAINTENANCE

Please pull out the power plug after you used the air condition.

Warning:

1. Pull out the power plug before cleaning.
2. Do not splash water directly.

How to clean the air filter	
1. Open the suction grille. 2. Slide both knobs simultaneously as shown and then pull them downward slowly.	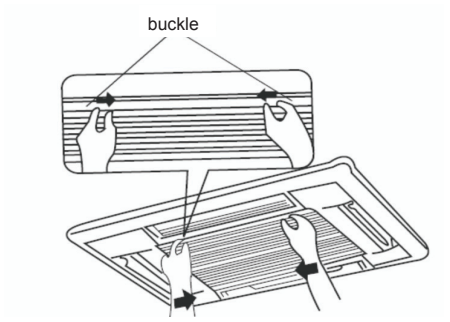
1. Remove the air filters. 2. Slide knobs on the back of the suction grille out ward and remove the air filter. 3. Then remove three air cleaners on it.	
● Clean the filter Use vacuum or wash the air filter with water when the air filter is very dirty, use neutral detergent and water. Let the filter dry naturally at shady place. **Note:** 1. Do not clean with hot water. 2. Do not dry over fire. 3. Do not run the air condition without the air filter. 4. The suction grille must be opened by skilled personnel.	
● Fix the air filters 1. Fix three air-cleaner on the air filter and then fix the air filter to the suction grille by hanging it to the projected portion above suction grille. 2. Set air filter by sliding the knob on the back of the suction grille inward.	
Shut the suction grille.	Refer to step.1

Все каталоги и инструкции здесь: https://splitsystema48.ru/instrukcii-po-ekspluatacii-kondicionerov.html

How to clean to the suction grille	
1. Open the suction grille	See step 1 of “How to clean the air filter”.
2. Remove the air filters	See step 2 of “How to clean the air filter”.
3. Remove the suction grille Open the suction grille at 45°and then lift.	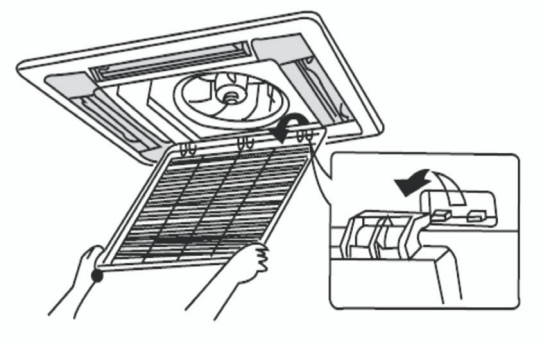
4. Wash with water. When the suction grille is very dirty, use soft brush and neutral detergent. Shake water and dry in a shady place.	
5. Fix the suction grille.	Refer to step 3.
6. Fix air filter.	See step 4 of “How to clean the air filter”.
7. Close the suction grille.	Refer to step 1.

Changing air cleaner	
1. Open the suction grille	See step 1 of “How to clean the air filter”
2.Remove the air cleaner Remove the air filter and remove the air cleaner after unscrewing.	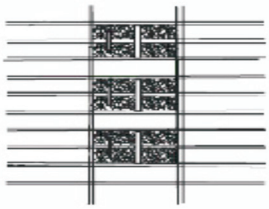
3. Take off packing bag and put in new static electricity fiber filter, then fix them on the air filter.	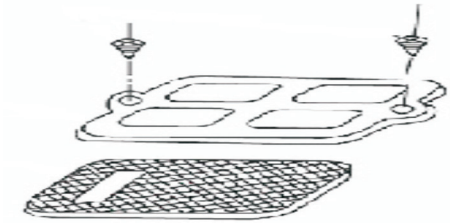
4. Fix the air filter	See step 4 of “How to clean the air filter”
Air cleaner functions and service cycle time.	
Absorbs bad smell in air such as carbon monoxide carbon dioxide, benzyl, gasoline and so on. Absorbs harmful objects bigger than 1.0 um in air such as dust, germ, virus and so on. It can be used for about half a year to one year.	

Все каталоги и инструкции здесь: https://splitsystema48.ru/instrukcii-po-ekspluatacii-kondicionerov.html

How to clean the air outer and case.

- Clean with soft cloth or use water and neutral detergent.
- Do not use gasoline, benzene, thinner, polishing powder, liquid insecticide, which may cause discoloring or warping.
- If the air flow flap is very dirty, you may remove it to clean as shown below.

Detach and fix the flap.

1. Detach the flap Loosen the screws on the sides of the flap clean with soft cloth.	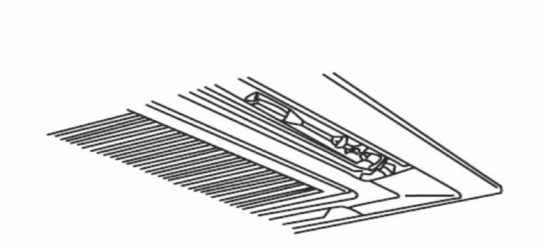
2. Fix the flap Set the ribs on the sides of the air outlet to the slit of the flap and then screw together to fix the flap.	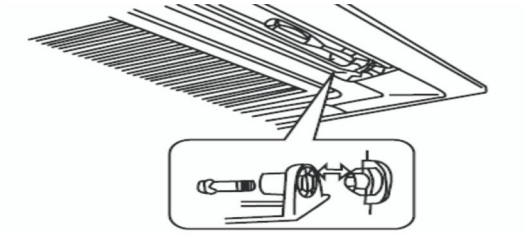

Before starting the air conditioner for the first time in the season.

1. Check to make sure no objects obstructing the intake and outlets parts on both the indoor and outdoor units. 2. Check to make sure ground wire is connected and that is not damaged. 3.Check to make sure air filter has been cleaned. 4. Turn on the power 6 hours before starting the air conditioner.	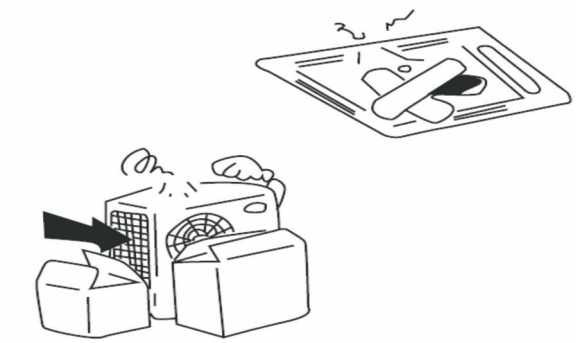

End of season cleaning

1. Clean the filter and the body of the unit. 2. Turn off power. 3. Clear outdoor of dust. 4. If there is any rust in the outdoor unit, this should be painted over to prevent the rust from spreading.	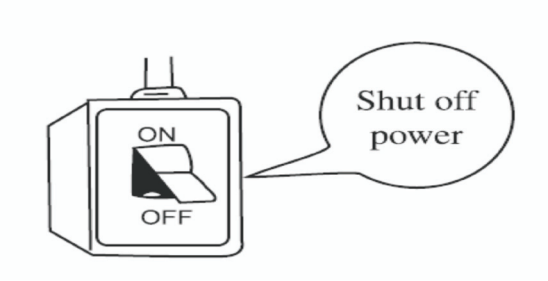

Все каталоги и инструкции здесь: https://splitsystema48.ru/instrukcii-po-ekspluatacii-kondicionerov.html

3. WIRING DIAGRAM

FP-8XD-E; FP-10XD–E; FP-12.5XD-E; FP-14XD-E;FP-14XD-E;FP-18XD-E.

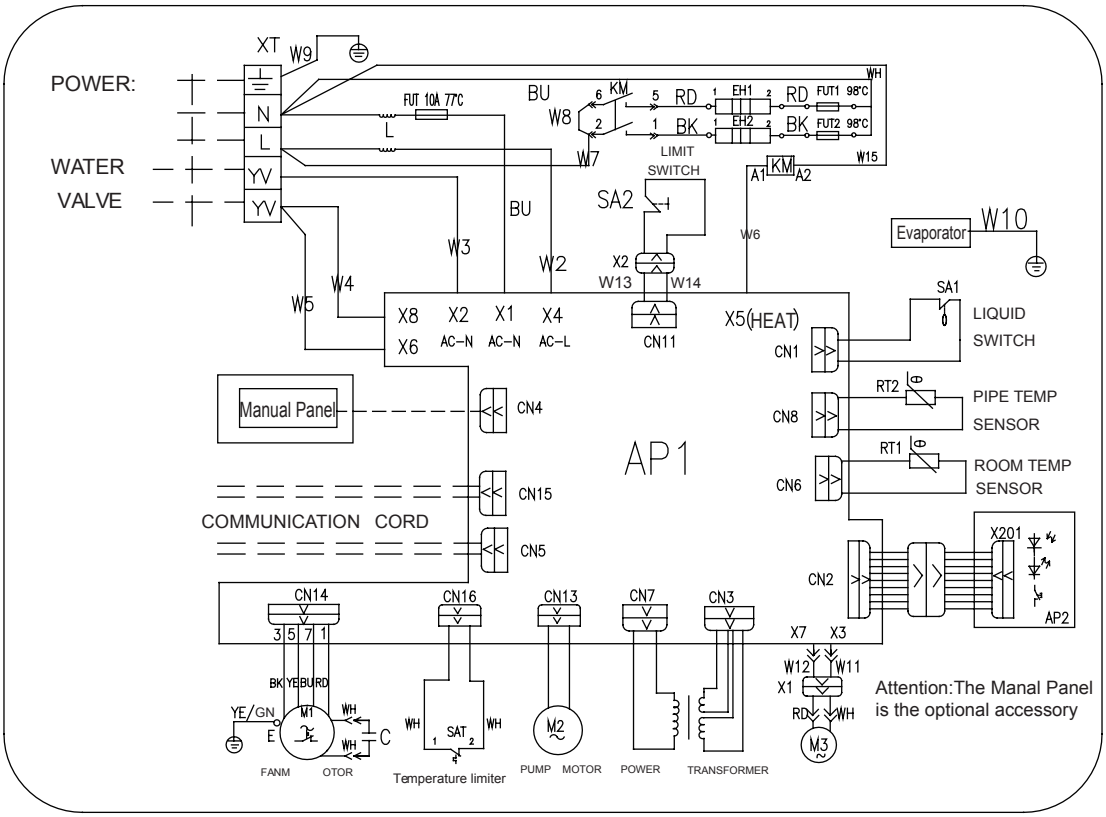

FP-8XD/A-E; FP-10XD/A–E; FP-12.5XD/A-E; FP-14XD/A-E;FP-16XD/A-E; FP-18XD/A-E.

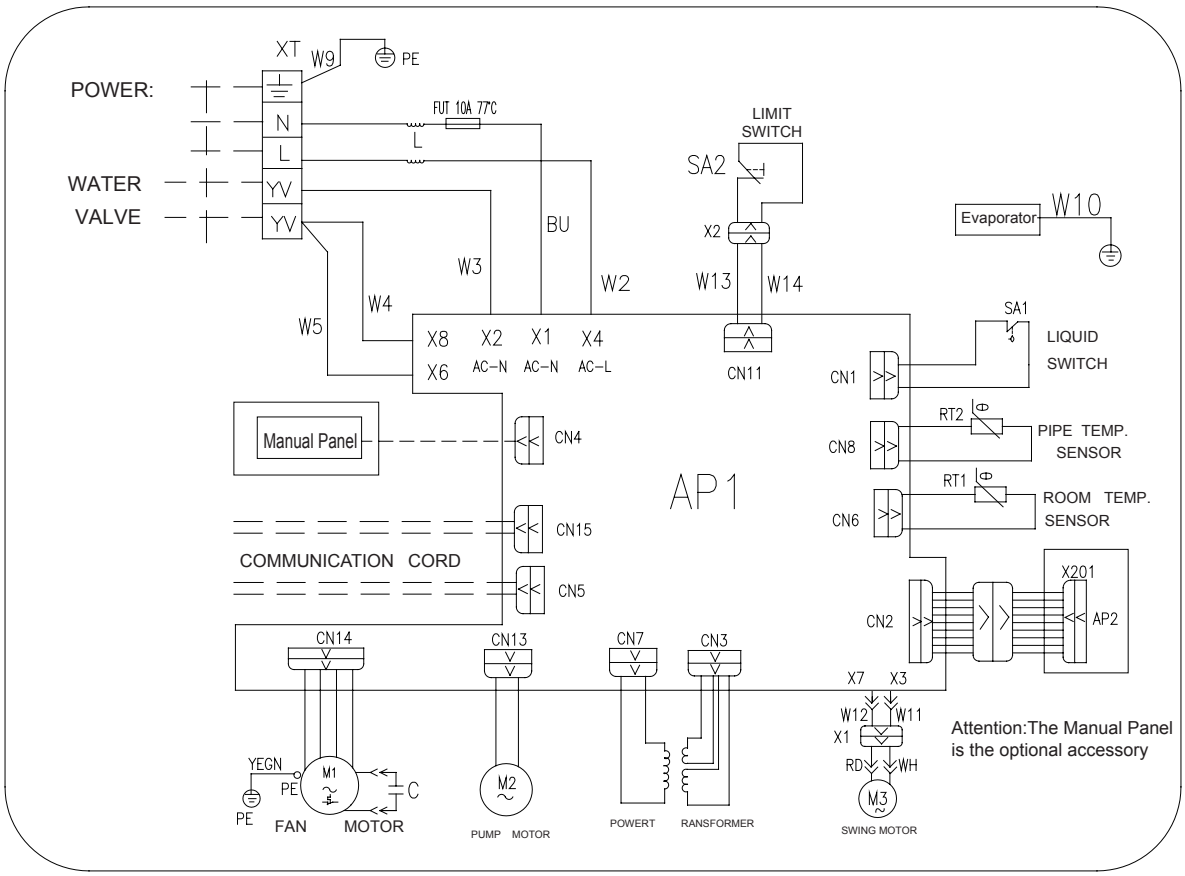

Все каталоги и инструкции здесь: https://splitsystema48.ru/instrukcii-po-ekspluatacii-kondicionerov.html

Model: FP-51XD –E; FP-68XD –E.

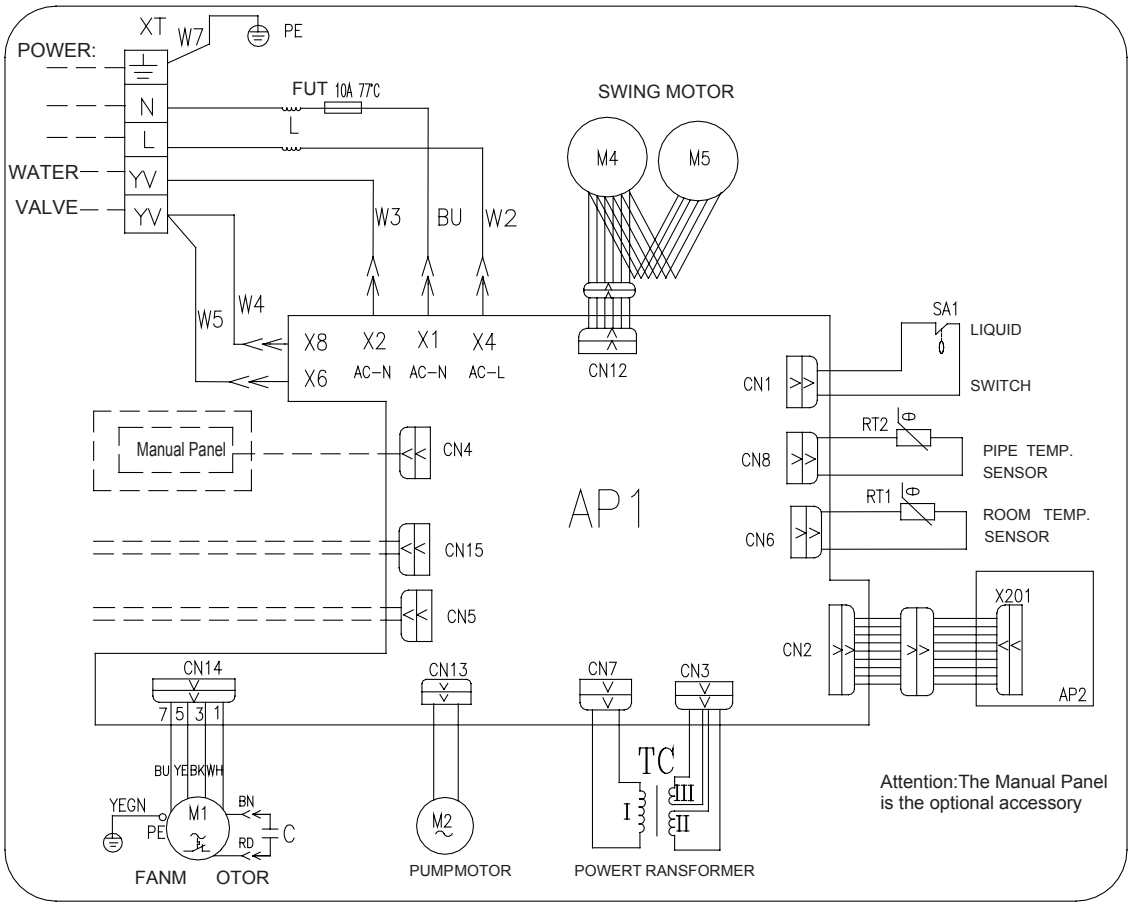

Model:FP-85XD/B-T;FP-102XD/B-T;FP-125XD/B-T;FP-140XD/B-T;FP-160XD/B-T;FP-180XD/B-T;FP-200XD/B-T.

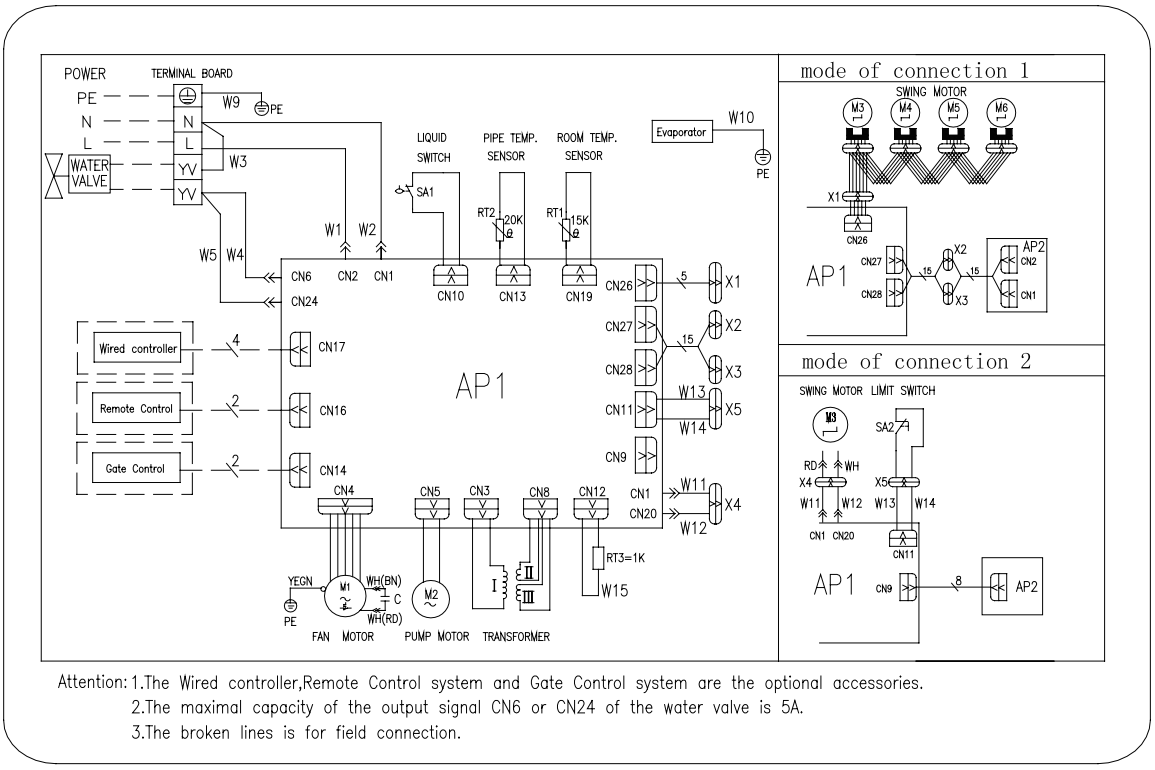

Все каталоги и инструкции здесь: https://splitsystema48.ru/instrukcii-po-ekspluatacii-kondicionerov.html

4. DISASSEMBLY AND ASSEMBLY PROCEDURE OF MAIN PARTS

Model;FP-8XD-E; FP-10XD–E; FP-12.5XD-E; FP-14XD-E; FP-16XD-E; FP-18XD-E;P-8XD/A-E; FP-10XD/A–E; FP-12.5XD/A-E; FP-14XD/A-E;FP-16XD/A-E; FP-18XD/A-E; FP-85XD/B-T; FP-102XD/B-T: FP-125XD/B-T; FP-140XD/B-T; FP-160XD/B-T; FP-180XD/B-T; FP-200XD/B-T; FP-85XD/B-T; FP-102XD/B-T: FP-125XD/B-T; FP-140XD/B-T; FP-160XD/B-T; FP-180XD/B-T; FP-200XD/B-T.

Disassembly Procedures of Indoor Unit (Panel T01)		
Remark: Make sure that the unit is stopped running and power supply is cut off before removal of the motor.		
Process	Pictorial View	Handling Description
1.Disassemble the grille of the front panel	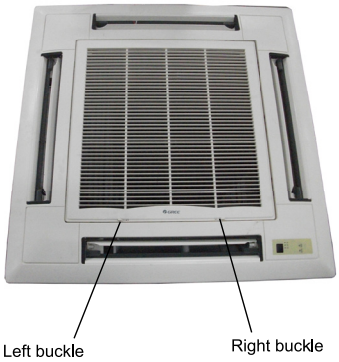	Push the left and right buckles on the grille of the front panel toward the center and meanwhile pull it upward until it forms a 45℃ angle, after that pull the grille backward.
2. Disassemble the front panel.	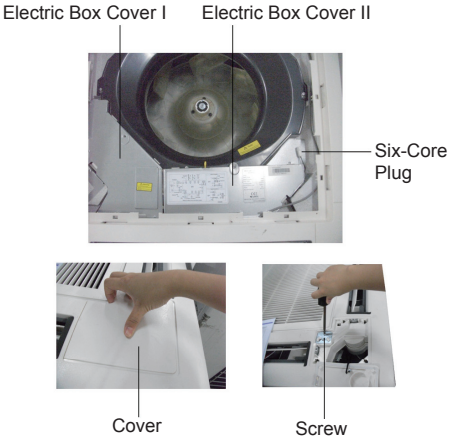	Disconnect the power cord of the fan motor and the plug of the limit switch. Open the cover II of the electric box and disconnect the six-cord plug, then remove covers on four corners away, after that, loosen the screws to the right position and turn the front panel counter clockwise and lastly pull it out upward.
3. Disassemble the drain pan.	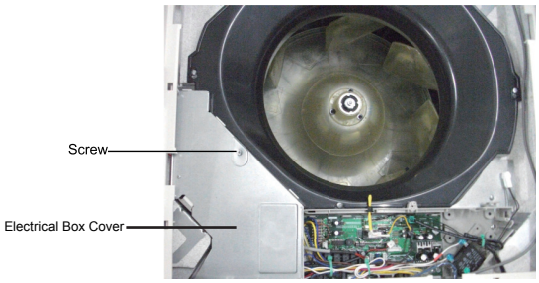	Loosen the screws on the cover Ⅰ of the electrical box and then open the cover.
4.Disassemble the electrical box	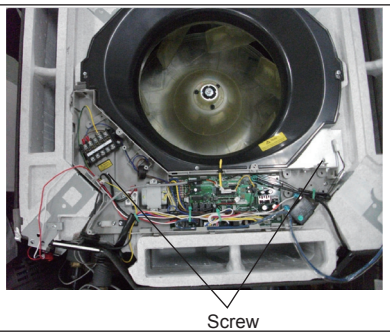	Loosen two screws fixing the electric box and then disconnect each wiring terminals, after that take the electric box out upward.

Все каталоги и инструкции здесь: https://splitsystema48.ru/instrukcii-po-ekspluatacii-kondicionerov.html

5.Disassemble the flow-guide loop	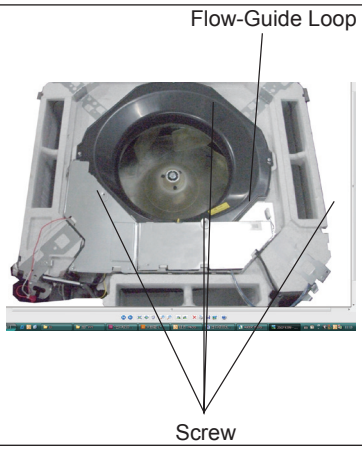	Loosen the screws fixing the flow-guide loop and then turn it counter clockwise.
6.Disassemble the drain pan	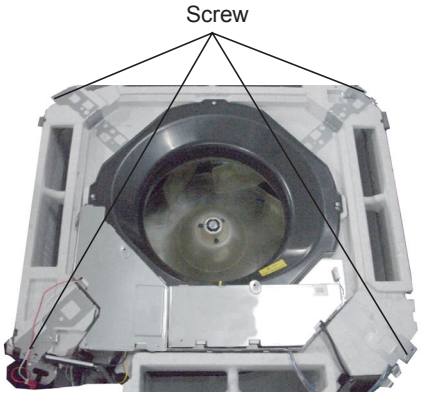	Loose the screws on the drain pan and take it out upward.
7.Disassemble the fan blade	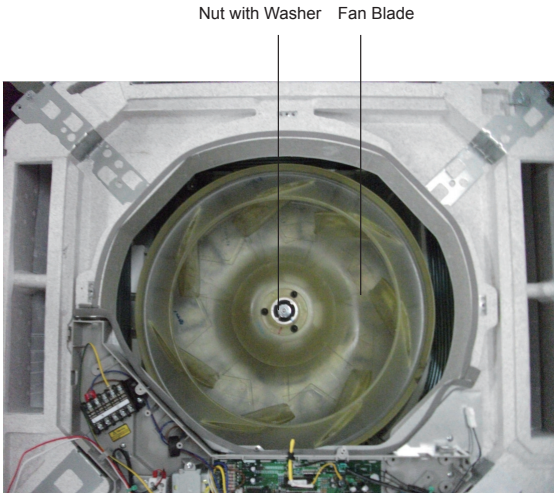	Loosen the screws on the fan blade and then take it out upward.

Все каталоги и инструкции здесь: https://splitsystema48.ru/instrukcii-po-ekspluatacii-kondicionerov.html

8. Disassemble the evaporator	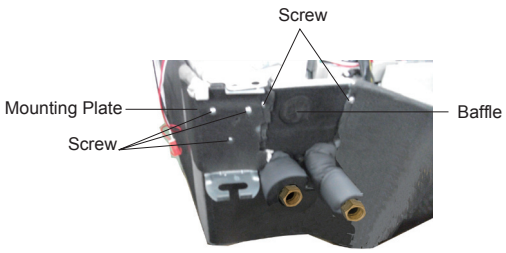 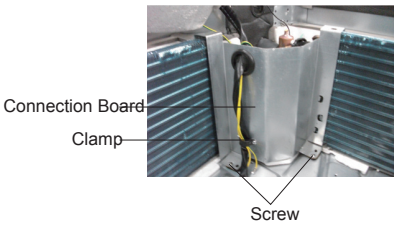 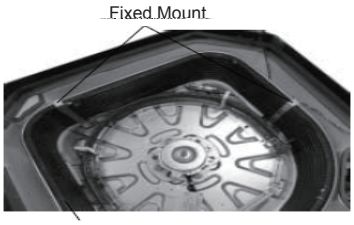	Loosen the screws on the mounting plate and take it out. Loosen the screws on the baffle of the pipe outlet, and then press it downward to pull out the buckles on both side, after that, take the baffle away. Loosen the screws and clamps on the connection board of the evaporator, disconnect the earth lead, and then take the power cord of the motor, electric heater and earth lead out through the wire-cross hole, after that loosen the screws on the fixed mount and remove it away, finally take the evaporator out upward.
9. Disassemble the motor	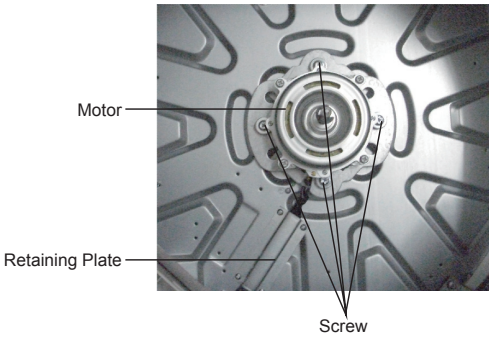	Loosen the screws on the retaining plate and the screw bolts on the motor, after that, take the motor out.
10. Disassemble the water pump and the drain pipe	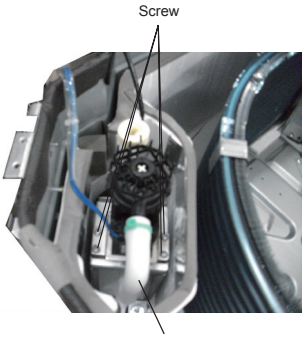 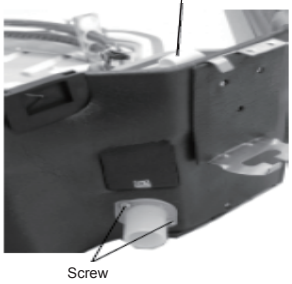	Loosen four screws fixing the water pump, disconnect the water pipe of the pump, take the mounting bracket away, then loosen these two screws fixing the water pipe, after that, take the water pipe away.

Все каталоги и инструкции здесь: https://splitsystema48.ru/instrukcii-po-ekspluatacii-kondicionerov.html

Model: FP-51XD –E; FP-68XD –E.

Disassembly Procedures of Indoor Unit		
Remark: Make sure that the unit is stopped running and power supply is cut off before removal of the motor.		
Process	Pictorial View	Handling Description
1. Disassemble the grille of the front panel	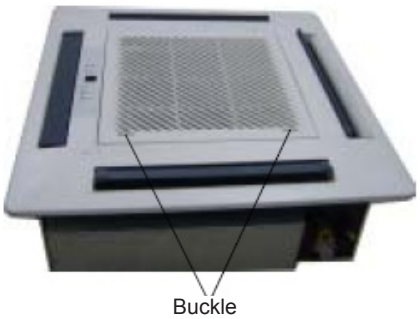	Push the left and right buckles on the grille of the front panel toward the center and meanwhile pull it upward until it forms a 45℃ angle, after that pull the grille backward.
2.Disassemble the front panel	Front panel 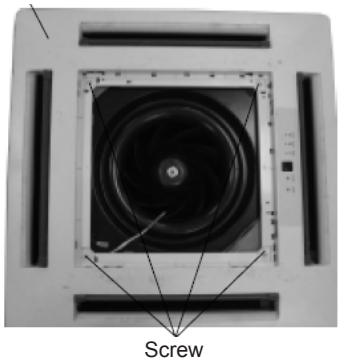	Disconnect the power cord of the fan motor and the plug of the limit switch. Open the cover Ⅱ of the electric box and disconnect the six-cord plug, then remove covers on four corners away, after that, loosen the screws to the right position and turn the front panel counter clockwise and lastly pull it out upward.
3. Disassemble the drain pan	Drain Pan 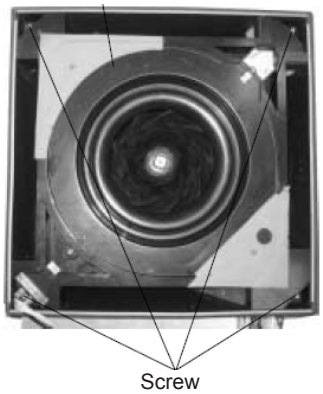	Loose the screws on the cover Ⅰ of the electric box and then take the cover away.

Все каталоги и инструкции здесь: https://splitsystema48.ru/instrukcii-po-ekspluatacii-kondicionerov.html

4. Disassemble the electrical box	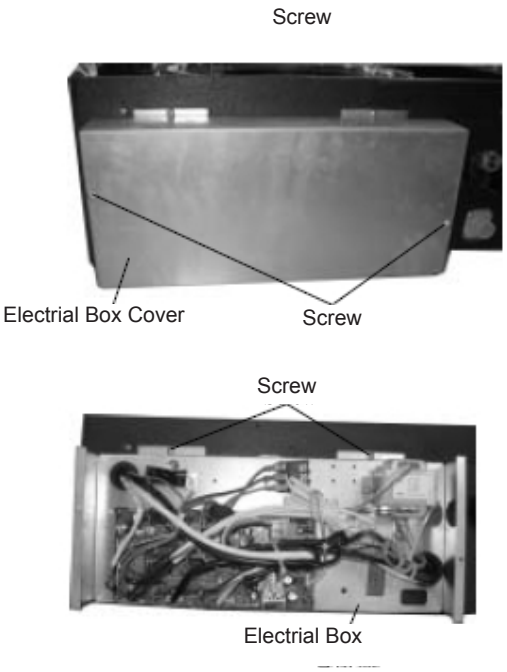	Loosen two screws on the cover of the electric box and then remove it away. Disconnect the wiring terminals of the motor and the temperature sensing bulb, then loosen two screws fixing the electric box, after that, remove the electric box away.
5. Disassemble the baffle at the pipe outlet.	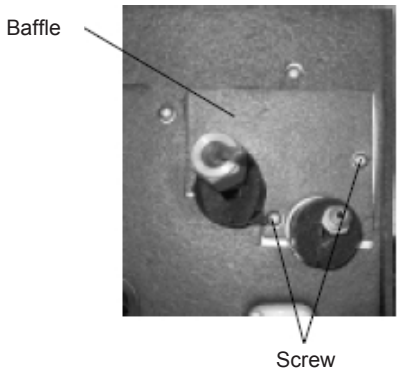	Loosen two screws on the baffle and take it out by turning it upward.
6. Disassemble the water pump	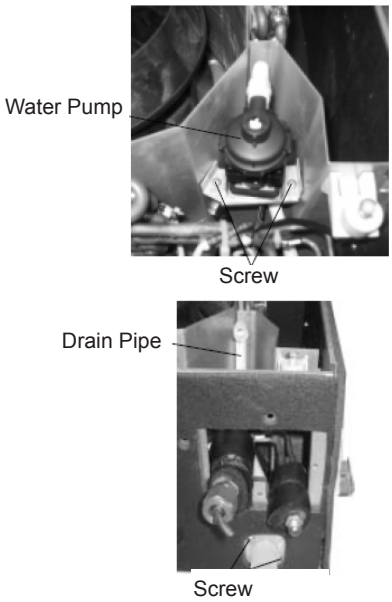	Loosen the screws fixing the drain pan and then take the it out upward.

Все каталоги и инструкции здесь: https://splitsystema48.ru/instrukcii-po-ekspluatacii-kondicionerov.html

7. Disassemble the left fender	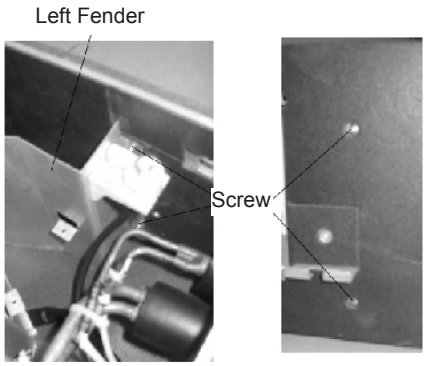	Loosen two screws on the left fender and then take it out upward.
8.Disassemble the fan blade	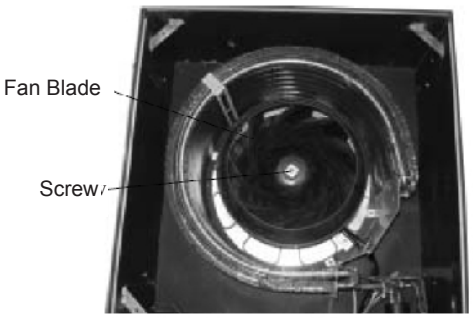	Loosen the screws on the fan blade and then take it out.
9.Disassemble the evaporator	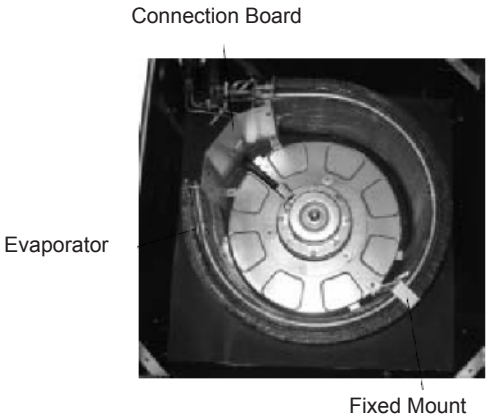	Loosen the screws on the connection board and the fixed mount of the evaporator, and then remove them away, after that, take the evaporator out.
10.Disassemble the motor	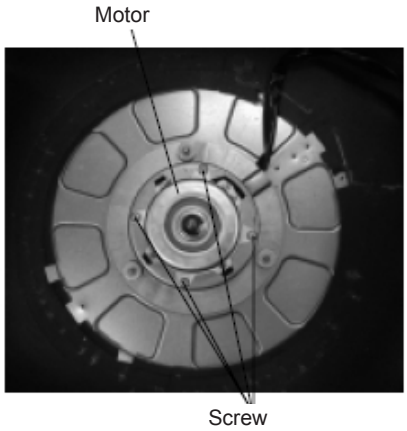	Loosen four screws fixing the motor and take the motor out.

Все каталоги и инструкции здесь: https://splitsystema48.ru/instrukcii-po-ekspluatacii-kondicionerov.html

5. EXPLODED VIEWS AND SPARE PART LISTS

Model: FP-8XD-E; FP-10XD–E; FP-12.5XD-E; FP-14XD-E;FP-16XD-E; FP-18XD-E exploded views and spare parts list.

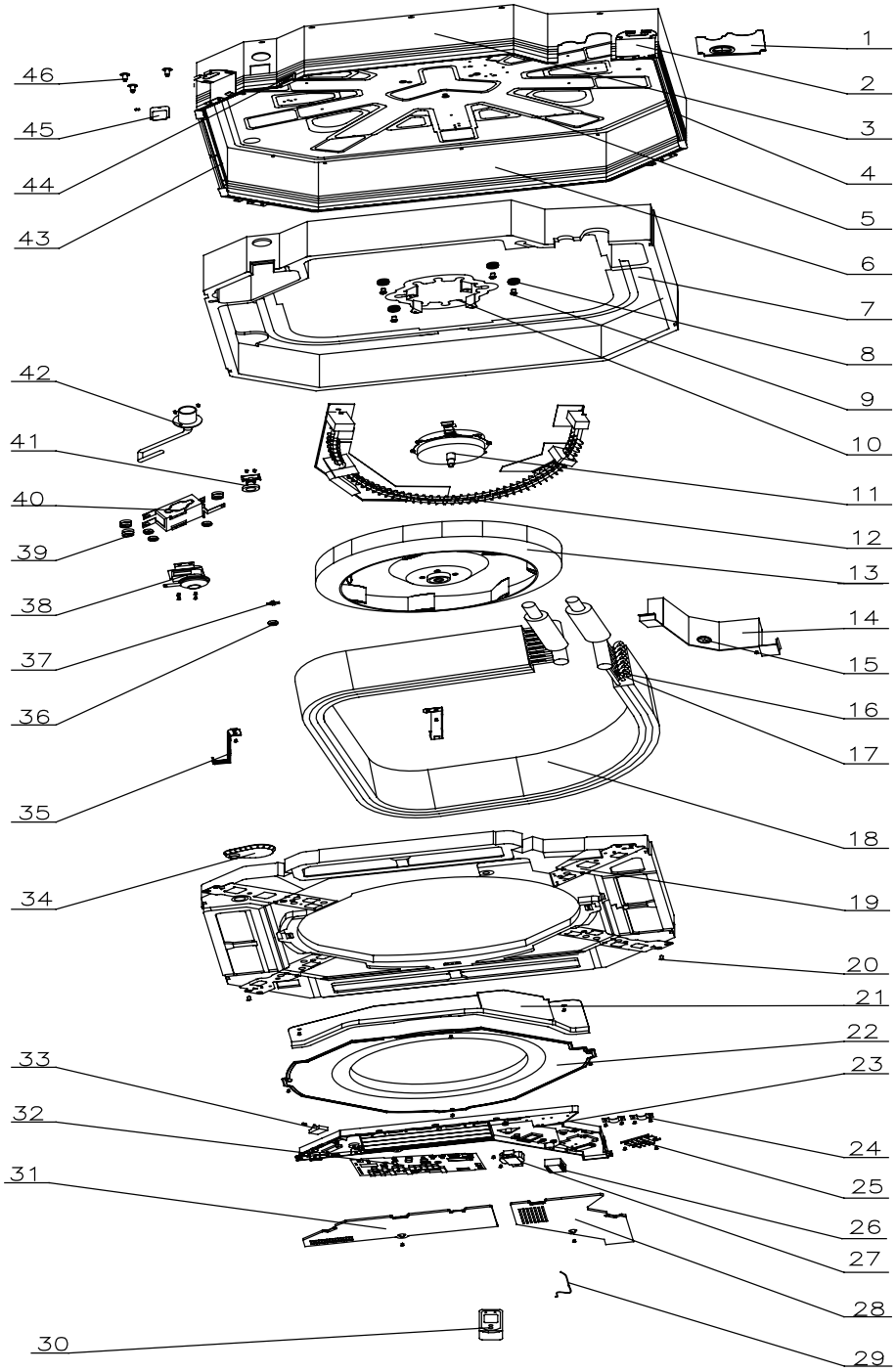

Все каталоги и инструкции здесь: https://splitsystema48.ru/instrukcii-po-ekspluatacii-kondicionerov.html

NO.	Discription	FP-8XD-E	FP-10XD-E	FP-12.5XD-E	Quantity
		EM52000050	EM52000060	EM52000030	
	Name of Parts	Part Code	Part Code	Part Code	
1	Tube Exit plate	02217102	02217102	02217102	1
2	Body Fixing Plate	01332701	01332701	01332701	4
3	Front Side Plate	01302718	01302718	01302718	1
4	Left Side Plate	01302715	01302715	01302715	1
5	Base Plate	01222701	01222701	01222701	1
6	Rear Side Plate	01302714	01302714	01302714	1
7	Bottom Foam	52012722	52012722	52012722	1
8	Motor Gasket	76712711	76712711	76712711	4
9	Bolt M6	70212711	70212711	70212711	4
10	Motor Support	01702701	01702701	01702701	1
11	Motor	15012703	15012703	15012703	1
12	Electric Heater	32002701	32002701	32002701	1
13	Centrifugal Fan	10312705	10312705	10312705	1
14	Evaporator Linkage	01074042	01074042	01074042	1
15	Cable-cross Loop	76512701	76512701	76512701	1
16	Tube sensor	3900012125	3900012125	3900012125	1
17	sensor insert B	42020063	42020063	42020063	1
18	Heat exchanger	01127104	01127104	01127104	1
19	Water Tray Assy	20182701	20182701	20182701	1
20	Rubber Stem	76712701	76712701	76712701	1
21	Electric Base Plate	01412722	01412721	01412721	1
22	Flow-guide Loop	10372701	10372701	10372701	1
23	Electric Box	20102701	20102701	20102701	1
24	Wire Clamp	71010102	71010102	71010102	4
25	Terminal Board	42011142	42011142	42011142	1
26	relay	44010206	44010206	44010206	1
27	Transformer	43110170	43110170	43110170	1
28	Electric Box Cover I	20102702	20102702	20102702	1
29	Room sensor	39000110	39000110	39000110	1
30	Remote Controller	30512506	30512506	30512506	1
31	Electric Box Cover II	20102703	20102703	20102703	1
32	Main	30225904	30225904	30225904	1
33	Capacitor	33010026	33010010	33010010	1
34	Drainage Plastic	06122702	06122702	06122702	1
35	Evap Support	01072703	01072703	01072703	1
36	Nut with Washer M6	70310012	70310012	70310012	1
37	Fan Fixer	10312701	10312701	10312701	1
38	Water Pump	43130324	43130324	43130324	1
39	Pump Gasket	76712702	76712702	76712702	3
40	Pump Support	01332702	01332702	01332702	1
41	Water Level Switch	45010201	45010201	45010201	1
42	Pump Drainpipe	05230026	05230026	05230026	1
43	Right Side Plate	01302716	01302716	01302716	1
44	Cable-cross Block	76512702	76512702	76512702	1
45	Pump Cover Plate	01252713	01252713	01252713	1
46	Bolt	70212701	70212701	70212701	3

Все каталоги и инструкции здесь: https://splitsystema48.ru/instrukcii-po-ekspluatacii-kondicionerov.html

NO.	Discription	FP-14XD-E	FP-16XD-E	FP-18XD-E	Quantity
		EM52000070	EM52000080	EM52000040	
	Name of Parts	Part Code	Part Code	Part Code	
1	Tube-exit Plate	02217102	02217102	02217102	1
2	Body Fixing Plate	01332701	01332701	01332701	4
3	Front Side Plate	01302713	01302713	01302713	1
4	Left Side Plate	01302711	01302711	01302711	1
5	Base Plate	01222732	01222732	01222732	1
6	Rear Side Plate	01302709	01302709	01302709	1
7	Bottom Foam	52012721	52012721	52012721	1
8	Motor Gasket	76712711	76712711	76712711	4
9	Bolt	70210012	70210012	70210012	4
10	Motor Support	01702701	01702701	01702701	1
11	Motor FN50T	15012710	15012710	15012710	1
12	Electric Heater	32002701	32002701	32002701	1
13	Centrifugal Fan	10310101	10310101	10310101	1
14	Evap Connection	01072735	01072735	01072735	1
15	Cable-cross Loop	76515202	76515202	76515202	1
16	Tube sensor	3900012125	3900012125	3900012125	1
17	sensor insert B	42020063	42020063	42020063	1
18	Heat exchanger	01187104	01187104	01187104	1
19	Water Tray	20182701	20182701	20182701	1
20	Screw	70140032	70140032	70140032	4
21	Electric Plate	01412721	01412721	01412721	1
22	Flow-guide Loop	10372722	10372722	10372722	1
23	Electric Box	20102701	20102701	20102701	1
24	Wire Clamp	71010103	71010103	71010103	3
25	Terminal Board	42011142	42011142	42011142	1
26	relay	44010206	44010206	44010206	1
27	Transformer	43110170	43110170	43110170	1
28	Electric Box Cover I	20102702	20102702	20102702	1
29	Room sensor	39000110	39000110	39000110	1
30	Remote Controller	30505004	30505004	30505004	1
31	Electric Box Cover II	20102703	20102703	20102703	1
32	Main	30225904	30225904	30225904	1
33	Capacitor	33010010	33010013	33010012	1
34	Drainage Plastic	06122702	06122702	06122702	1
35	Evap Support	01072705	01072705	01072705	2
36	Nut with Washer	70310012	70310012	70310012	1
37	Fixer	10312701	10312701	10312701	1
38	Water Pump	43130324	43130324	43130324	1
39	Pump Gasket	76712702	76712702	76712702	3
40	Pump Support	01332721	01332721	01332721	1
41	Water Level Switch	45010201	45010201	45010201	1
42	Pump Drainpipe	05230026	05230026	05230026	1
43	Right Side Plate	01302712	01302712	01302712	1
44	Cable-cross Block	76512702	76512702	76512702	1
45	Pump Cover Board	01252713	01252713	01252713	1
46	Bolt	70212701	70212701	70212701	3

Все каталоги и инструкции здесь: https://splitsystema48.ru/instrukcii-po-ekspluatacii-kondicionerov.html

P-8XD/A-E; FP-10XD/A–E; FP-12.5XD/A-E; FP-14XD/A-E;FP-16XD/A-E; FP-18XD/A-E exploded views and spare parts list.

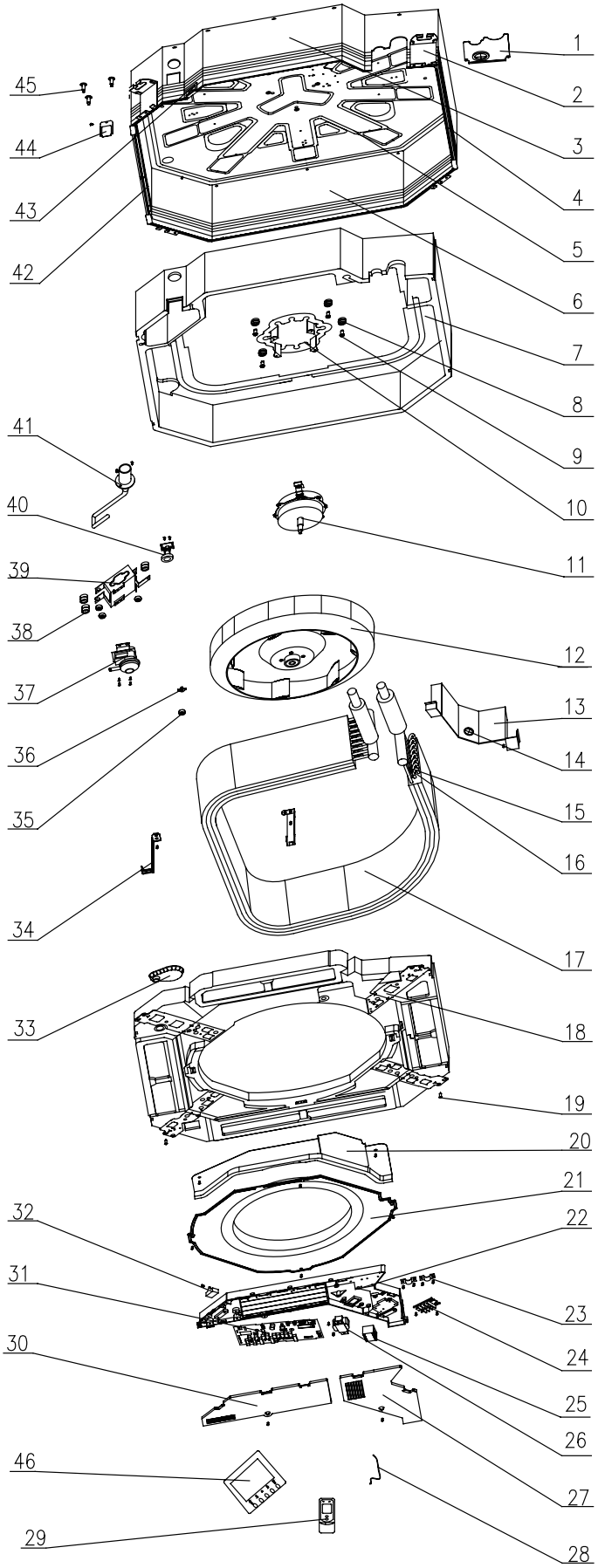

Все каталоги и инструкции здесь: https://splitsystema48.ru/instrukcii-po-ekspluatacii-kondicionerov.html

NO.	Discription	FP-8XD/A-E	FP-10XD/A-E	FP-12.5XD/A-E	Quantity
		EM52000450	EM52000460	EM52000470	
	Name of Parts	Part Code	Part Code	Part Code	
1	Tube Exit plate	02217102	02217102	02217102	1
2	Body Fixing Plate	01332701	01332701	01332701	4
3	Front Side Plate	01302718	01302718	01302718	1
4	Left Side Plate	01302715	01302715	01302715	1
5	Base Plate	01222701	01222701	01222701	1
6	Rear Side Plate	01302714	01302714	01302714	1
7	Bottom Foam	52012722	52012722	52012722	1
8	Motor Gasket	76712711	76712711	76712711	4
9	Bolt M6	70212711	70210051	70210051	4
10	Motor Support	01702701	01702701	01702701	1
11	Motor FN35B	15012703	15012703	15012703	1
12	Centifugal Fan	10312705	10312705	10312705	1
13	Evaporator Linkage	01074042	01072710	01072710	1
14	Cable-cross Loop	76515202	76513101	76513101	1
15	Tube sensor	3900012125	3900012125G	3900012125G	1
16	sensor insert B	42020063	42020063	42020063	1
17	Heat exchanger	01127104	01127104	01127104	1
18	Water Tray Assy	20182701	20182701	20182701	1
19	Rubber Stem	76712701	70140032	70140032	1
20	Electric Base Plate	01412721	01412721	01412721	1
21	Flow-guide Loop	10372701	10372701	10372701	1
22	Electric Box	20102701	20102701	20102701	1
23	Wire Clamp	71010102	71010102	71010102	4
24	Terminal Board	42011142	42011142	42011142	1
25	Transformer	43110233	43110233	43110233	1
26	Electric Box Cover I	20102702	20102702	20102702	1
27	Room sensor	39000111	390001911	390001911	1
28	Remote Controller	305125063	305125063	305125063	1
29	Electric Box Cover II	20102703	20102703	20102703	1
30	Main PCB	30225904	30225904	30225904	1
31	Capacitor	33010026	33010010	33010010	1
32	Drainage pipe	4367120	05230026	05230026	1
33	Evap Support	01072703	01074042	01074042	1
34	Nut with Washer	70310012	70310012	70310012	1
35	Fan Fixer	10312701	10312701	10312701	1
36	Water Pump	43130324	43130324	43130324	1
37	Pump Gasket	76712702	76712702	76712702	3
38	Pump Support	1329416	01332702	01332702	1
39	Water Level Switch	45010201	45010201	45010201	1
40	Pump Drainpipe	05230026	05230026	05230026	1
41	Right Side Plate	01302716	01302716	01302716	1
42	Cable-cross Block	76512702	76512702	76512702	1
43	Pump Cover Plate	01252713	01252713	01252713	1
44	Bolt	70212701	70212711	70212711	3

Все каталоги и инструкции здесь: https://splitsystema48.ru/instrukcii-po-ekspluatacii-kondicionerov.html

NO.	Discription	FP-14XD/A-E	FP-16XD/A-E	FP-18XD/A-E	Quantity
		EM52000480	EM52000490	EM5200500	
	Name of Parts	Part Code	Part Code	Part Code	
1	Tube-exit Plate	02217102	02217102	02217102	1
2	Body Fixing Plate	01332701	01332701	01332701	4
3	Front Side Plate	01302713	01302718	01302718	1
4	Left Side Plate	01302711	01302715	01302715	1
5	Base Plate	01222701	01222701	01222701	1
6	Rear Side Plate	01302709	01302714	01302714	1
7	Bottom Foam	52012721	52012722	52012722	1
8	Motor Gasket	76712711	76712711	76712711	4
9	Bolt	70210051	70210051	70210051	4
10	Motor Support	01702701	01702701	01702701	1
11	Motor	15012710	15012703	15012703	1
12	Centifugal Fan	10310101	10312705	10312705	1
13	Evap Connection	01072710	01072710	01072710	1
14	Cable-cross Loop	76513101	76513101	76513101	1
15	Tube sensor	3900012125G	3900012125G	3900012125G	1
16	sensor insert B	42020063	42020063	42020063	1
17	Heat exchanger	01127102	01127104	01127104	1
18	Water Tray	20182701	20182701	20182701	1
19	Screw	70140032	70140032	70140032	4
20	Electric Plate	01412721	01412721	01412721	1
21	Flow-guide Loop	10372722	10372701	10372701	1
22	Electric Box	20102701	20102701	20102701	1
23	Wire Clamp	71010102	71010102	71010102	3
24	Terminal Board	42011142	42011142	42011142	1
25	Transformer	43110233	43110233	43110233	1
26	Electric Box Cover I	20102702	20102702	20102702	1
27	Room sensor	390001911	390001911	390001911	1
28	Remote Controller	305125063	305125063	305125063	1
29	Electric Box Cover II	20102703	20102703	20102703	1
30	Main PCB	30225904	30225904	30225904	1
31	Capacitor	33010026	33010012	33010012	1
32	Drainage Plastic	05230026	05230026	05230026	1
33	Evap Support	01072732	01074042	01074042	2
34	Nut with Washer	70310012	70310012	70310012	1
35	Fixer	10312701	10312701	10312701	1
36	Water Pump	43130324	43130324	43130324	1
37	Pump Gasket	76712702	76712702	76712702	3
38	Pump Support	01332721	01332702	01332702	1
39	Water Level Switch	45010201	45010201	45010201	1
40	Pump Drainpipe	05230026	05230026	05230026	1
41	Right Side Plate	01302712	01302716	01302716	1
42	Cable-cross Block	76512702	76512702	76512702	1
43	Pump Cover Board	01252713	01252713	01252713	1
44	Bolt	70212711	70212711	70212711	3

Все каталоги и инструкции здесь: https://splitsystema48.ru/instrukcii-po-ekspluatacii-kondicionerov.html

FP-51XD –E; FP-68XD –E exploded views and spare parts list.

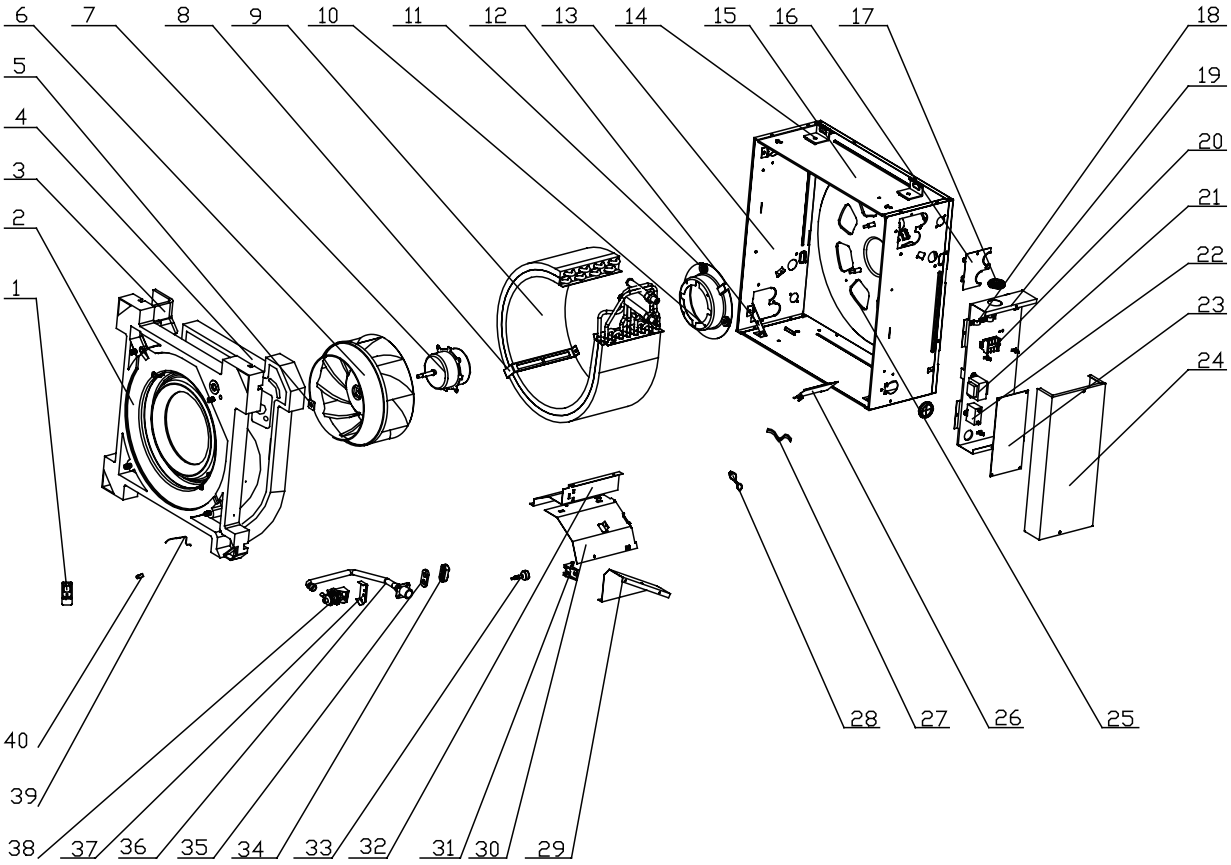

Все каталоги и инструкции здесь: https://splitsystema48.ru/instrukcii-po-ekspluatacii-kondicionerov.html

NO.	Discription	FP-51XD –E	FP-68XD –E	Quantity
		EM52000010	EM52000020	
	Name of Parts	Part Code	Part Code	
1	Remote Controller	30512506	30512506	1
2	Water Tray	20182703	20182703	1
3	Water Tray Foam for Fresh Air In taking	12312702	12312702	1
4	Water Tray Foam	12312703	12312703	1
5	Fan Fixer	76712709	76712709	1
6	Centrifugal Fan	10312702	10312702	1
7	Motor	15012707	15012707	1
8	Evap Support	01072714	01072714	1
9	Surface Air Cooler Assy	01109501	01109501	1
10	Motor Support	01702702	01702702	1
11	Motor Gasket	76712705	76712705	4
12	Water Tray support	01332706	01332706	4
13	Front Side Plate	01302741	01302741	2
14	Body Fixer	01332705	01332705	4
15	Right Side Plate	01302743	01302743	2
16	Tube-exit plate	01382719	01382719	1
17	Cable-cross Loop	76512701	76512701	2
18	Wire Clamp	71010102	71010102	2
19	Electric Box Assy	01402705	01402705	1
20	Terminal Board(5bit)	42011142	42011142	1
21	Transformer	43110233	43110233	1
22	Capacitor	33010035	33010035	1
23	Main PCB	30225903	30225903	1
24	Electric Box Cover	01412723	01412723	1
25	Base Plate	01222712	01222712	1
26	Cord Baffle Plate	01362701	01362701	1
27	Connecting Wire	40030079	40030079	1
28	Power Cord Assy	40020203	40020203	1
29	Left Baffle Plate	01362703	01362703	1
30	Evap Connection	01072713	01072713	1
31	Water Level Switch Support	24212705	24212705	1
32	Right Baffle Plate	01362702	01362702	1
33	Water Level Switch	450127011	450127011	1
34	Pump Gasket 1	76712707	76712707	1
35	Pump Gasket 2	76712708	76712708	1
36	Pump Drainage	05232722	05232722	1
37	Pump Support	01332707	01332707	1
38	Water Pump	43130320	43130320	1
39	Room Sensor	39000191	39000191	1
40	Wire Clamp	71010105	71010105	1

Все каталоги и инструкции здесь: https://splitsystema48.ru/instrukcii-po-ekspluatacii-kondicionerov.html

FP-85XD/B-T; FP-102XD/B-T;FP-125XD/B-T;FP-140XD/B-T;FP-160XD/B-T;FP-180XD/B-T;FP-200XD/B-T exploded views and spare parts list.

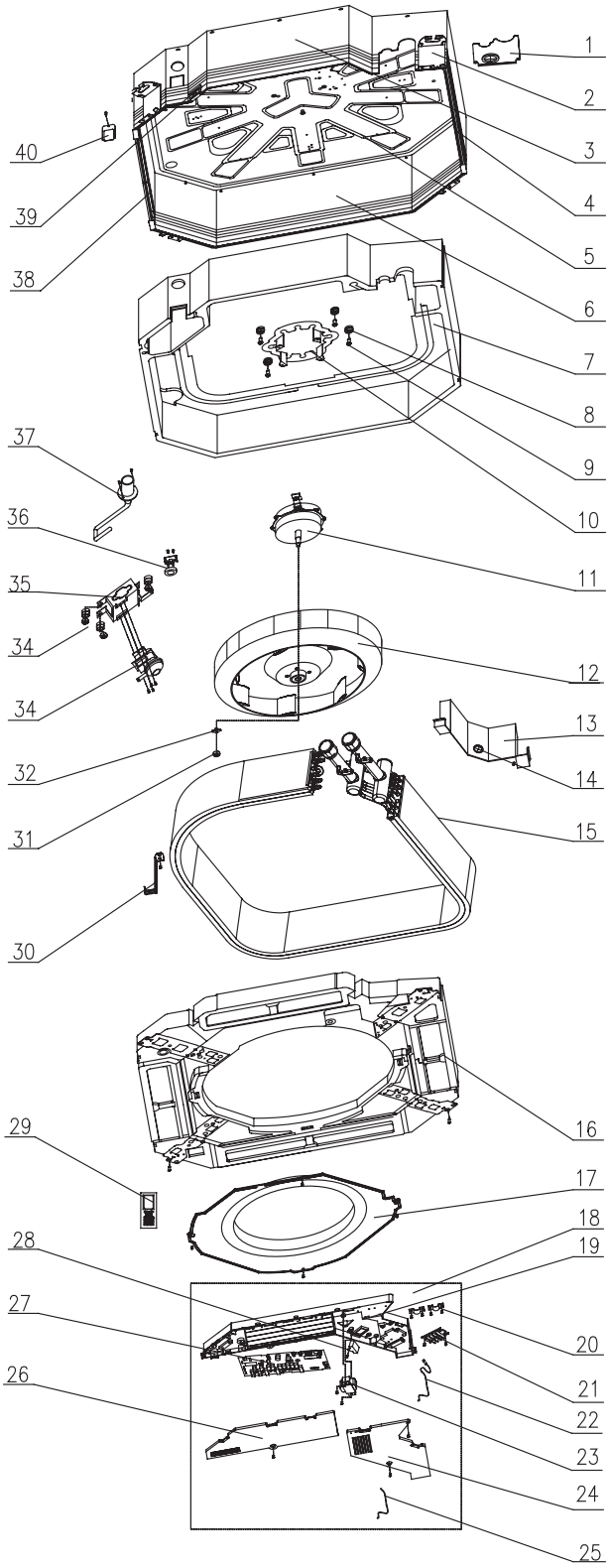

Все каталоги и инструкции здесь: https://splitsystema48.ru/instrukcii-po-ekspluatacii-kondicionerov.html

NO.	Discription	FP-85XD/B-T	FP-102XD/B-T	Quantity
		EM520N0930/EM520N0940	EM520N0910/EM520N0920	
	Name of Parts	Part Code	Part Code	
1	Tube-exit Plate			/
2	Body Fixing Plate	01332701	01332701	4
3	Front Side Plate	01302717	01302717	1
4	Left Side Plate	01302740	01302740	1
5	Base Plate	01222701	01222701	1
6	Rear Side Plate	01302719	01302719	1
7	Bottom Foam	52012720	52012720	1
8	Motor Gasket	76712711	76712711	4
9	Bolt	70210051	70210051	4
10	Motor Support	01702701	01702701	1
11	Motor	15704901	15704901	1
12	Centifugal Fan	10312721	10312721	1
13	Evap Connection	01072004	01072004	1
14	Cable-cross Loop	76515202	76515202	1
15	Heat exchanger	01126000042	01126000042	1
16	Water Tray	20182701	20182701	1
17	Flow-guide Loop	10372722	10372722	1
18	Electric Box asm	01396000021	01396000025	1
19	Electric Box	26909439	26909439	1
20	Wire Clamp	71010102	71010102	2
21	Terminal Board	42011221	42011221	1
22	Tube sensor	390001982G	390001982G	1
23	Transformer	4311022602	4311022602	1
24	Electric Box Cover I	20102702	20102702	1
25	Room sensor	390001912	390001912	1
26	Electric Box Cover II	20102703	20102703	1
27	Main PCB	30226275	30226275	1
28	Capacitor	3301074702	3301074711	1
29	Remote Controller	305100413	305100413	1
30	Evap Support	01072003	01072003	2
31	Nut with Washer	70310012	70310012	3
32	Fixer	10312701	10312701	1
33	Water Pump	43130324	43130324	1
34	Pump Gasket	76712702	76712702	3
35	Pump Support	01332001	01332001	1
36	Water Level Switch	45018012	45018012	1
37	Pump Drainpipe	05232721	05232721	1
38	Right Side Plate	01302710	01302710	1
39	Cable-cross Block	76512702	76512702	1
40	Pump Cover Board	01252712	01252712	1

Все каталоги и инструкции здесь: https://splitsystema48.ru/instrukcii-po-ekspluatacii-kondicionerov.html

NO.	Discription	FP-125XD/B-T	FP-140XD/B-T	FP-160XD/B-T	Quantity
		EM520N0890/EM520N0900	EM520N0870EM520N0880	EM520N0850/EM520N0860	
	Name of Parts	Part Code	Part Code	Part Code	
1	Tube-exit Plate	02206000001	02206000001	02206000001	1
2	Body Fixing Plate	01332701	01332701	01332701	4
3	Front Side Plate	01302718	01302718	01302718	1
4	Left Side Plate	01302715	01302715	01302715	1
5	Base Plate	52012722	52012722	52012722	1
6	Rear Side Plate	01302714	01302714	01302714	1
7	Bottom Foam	52012722	52012722	52012722	1
8	Motor Gasket	76712711	76712711	76712711	4
9	Bolt	70210051	70210051	70210051	4
10	Motor Support	01702701	01702701	01702701	1
11	Motor	15704102	1570410202	1570410202	1
12	Centifugal Fan	10312705	10312705	10312705	1
13	Evap Connection	01072710	01072710	01072710	1
14	Cable-cross Loop	76515202	76515202	76515202	1
15	Heat exchanger	01126000030	01126000030	01126000044	1
16	Water Tray	20182701	20182701	20182701	1
17	Flow-guide Loop	10372722	10372722	10372722	1
18	Electric Box asm	01396000019	01396000030	01396000025	1
19	Electric Box	26909439	26909439	26909439	1
20	Wire Clamp	71010102	71010102	71010102	2
21	Terminal Board	42011221	42011221	42011221	1
22	Tube sensor	390001982G	390001982G	390001982G	1
23	Transformer	4311022602	4311022602	4311022602	1
24	Electric Box Cover I	20102702	20102702	20102702	1
25	Room sensor	390001912	390001912	390001912	1
26	Electric Box Cover II	20102703	20102703	20102703	1
27	Main PCB	30226275	30226275	30226275	1
28	Capacitor	3301074702	33010011	3301074711	1
29	Remote Controller	305100413	305100413	305100413	1
30	Evap Support	01072715	01072715	01072715	2
31	Nut with Washer	70310012	70310012	70310012	1
32	Fixer	10312701	10312701	10312701	1
33	Water Pump	43130324	43130324	43130324	1
34	Pump Gasket	76712702	76712702	76712702	3
35	Pump Support	01329416	01329416	01329416	1
36	Water Level Switch	45018012	45018012	45018012	1
37	Pump Drainpipe	05230026	05230026	05230026	1
38	Right Side Plate	01302716	01302716	01302716	1
39	Cable-cross Block	76512702	76512702	76512702	1
40	Pump Cover Board	01252713	01252713	01252713	1

Все каталоги и инструкции здесь: https://splitsystema48.ru/instrukcii-po-ekspluatacii-kondicionerov.html

NO.	Discription	FP-160XD/B-T	FP-200XD/B-T	Quantity
		EM520N0830/EM520N0840	EM520N0810/EM520N0820	
	Name of Parts	Part Code	Part Code	
1	Tube-exit Plate	02206000001	02206000001	1
2	Body Fixing Plate	01332701	01332701	4
3	Front Side Plate	01302713	01302713	1
4	Left Side Plate	01302711	01302711	1
5	Base Plate	01222701	01222701	1
6	Rear Side Plate	01302709	01302709	1
7	Bottom Foam	52012721	52012721	1
8	Motor Gasket	76712711	76712711	4
9	Bolt	70210051	70210051	4
10	Motor Support	01702701	01702701	1
11	Motor	1570490301	1570490301	1
12	Centifugal Fan	26904115	26904115	1
13	Evap Connection	01072733	01072733	1
14	Cable-cross Loop	76515202	76515202	1
15	Heat exchanger	01126000043	01126000043	1
16	Water Tray	20182701	20182701	1
17	Flow-guide Loop	10372722	10372722	1
18	Electric Box asm	01396000019	01396000025	1
19	Electric Box	26909439	26909439	1
20	Wire Clamp	71010102	71010102	2
21	Terminal Board	42011221	42011221	1
22	Tube Sensor	390001982G	390001982G	1
23	Transformer	4311022602	4311022602	1
24	Electric Box Cover I	20102702	20102702	1
25	Room sensor	390001912	390001912	1
26	Electric Box Cover II	20102703	20102703	1
27	Main PCB	30226275	30226275	1
28	Capacitor	3301074711	3301074711	1
29	Remote Controller	305100413	305100413	1
30	Evap Support	01072708	01072708	2
31	Nut with Washer	70310012	70310012	1
32	Fixer	10312701	10312701	1
33	Water Pump	43130324	43130324	1
34	Pump Gasket	76712702	76712702	3
35	Pump Support	01332721	01332721	1
36	Water Level Switch	45018012	45018012	1
37	Pump Drainpipe	05230026	05230026	1
38	Right Side Plate	01302712	01302712	1
39	Cable-cross Block	76512702	76512702	1
40	Pump Cover Board	01252713	01252713	1

Все каталоги и инструкции здесь: https://splitsystema48.ru/instrukcii-po-ekspluatacii-kondicionerov.html

JF00300710

GREE ELECTRIC APPLIANCES, INC. OF ZHUHAI

Add: West Jinji Rd, Qianshan, Zhuhai, Guangdong, China, 519070
Tel: (+86-756) 8522218 Fax: (+86-756) 8669426
E-mail: gree@gree.com.cn www.gree.com

For continuous improvement in the products, Gree reserves the right to modidy the product specification and appearance in this manual without notice and without incurring any obligations.

splitoff.ru

Большая библиотека технической документации

https://splitsystema48.ru/instrukcii-po-ekspluatacii-kondicionerov.html

каталоги, инструкции, сервисные мануалы, схемы.